CHAPTER 1

INTRODUCTION

1.1. BACKGROUND

Renewable energy technologies are increasingly applied throughout the world to supply the demand for "clean energy" as the concerns of the impact of non-renewable energy extraction and use on the environment increases. Biomass gasification is an old concept that is starting to gain popularity. The concept has been there for the past eight decades. In South Africa the majority of poor people live in rural areas that are located outside the electricity grid or cannot afford presently available energy services. Most of these rural areas are endowed with biomass resources that can be used to supply rural communities with their energy demands.

Biomass is a renewable energy source with a potential to meet the energy needs of both developed and developing countries throughout the world [European Commission, 1997 and International Energy Agency, 2000]. Electricity generation from woody biomass grew from 59.5 to 79.6 TWh between 1990 and 2001 around the world, yielding a 2.7% average annual growth. As the second largest renewable electricity source after hydropower, solid biomass accounted for 5.6% of renewable electricity generation in 2001[World Energy Council, 2004]. Biomass comprises unprocessed plant matter, which are wood, twigs, straw, animal dung, vegetable matter and agricultural wastes. Processed biomass includes charcoal, methane, sawdust and alcohol produced from fermentation processes. Biomass fuels can be converted to energy through thermochemical and biological processes. Biomass gasification has attracted the highest interest amongst the thermochemical conversion technologies as it offers higher efficiencies in relation to combustion [Maniatis, 1999 and Costello, 1999]. The conversion efficiency of combustion processes is lowered by the converters from thermal power to electrical power. Biomass gasification also produces far much less greenhouse gases than combustion processes thereby improving the world's carbon footprint.

Biomass gasification is the conversion of wood, charcoal, sawdust and other biomass materials into a gaseous energy carrier known as syngas [Hos and Groeneveld, 1987]. Syngas is a mixture of carbon monoxide (approximately 22%), hydrogen (aaproximately 15%), methane (approximately 3%), carbon dioxide (approximately 11%), nitrogen (approximately 40%) and steam (approximately 6%) [Enger & Smith, 2002 and Li *et al*, 2004]. This syngas is used largely for heating and electric generation. It can also be used in industries to produce methanol, ethanol, Dimethyl Ether (DME) or ammonia [Kerekezi and Ranja, 1997, Higo and Dowaki, 2010 and Munasinghe and Khanal, 2009].

The development of commercial activities in underdeveloped areas is a crucial factor in the economic empowerment of the poor and modern energy services are an essential input for the development of these activities, electricity in particular is a key to economic activities [Department of Minerals and Energy, 2004].

A biomass gasifier developed by K.G Johansson has been built at Melani village (Eastern Cape) to provide the community's industry with additional and affordable power source, and stimulate economic development by providing electricity for the promotion of small businesses. This is a demonstration project that will also prove the viability and affordability of the technology hence the need for research. The major feedstock of the gasifier is the off-cuts produced by the sawmill operating in the village.

1.2. OVERVIEW OF THE GASIFICATION PROCESS

Figure 1.1 shows an overview of the gasification process and its products and by-products.

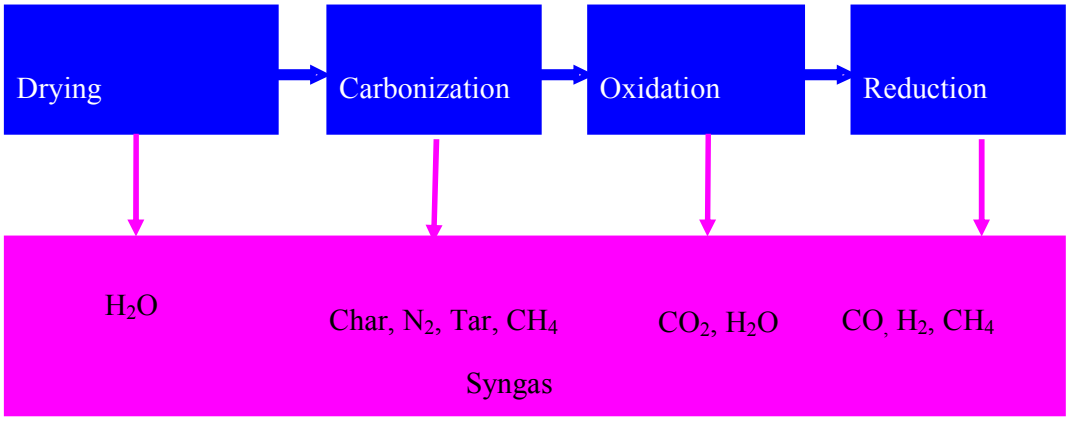

Figure 1.1: Overview of the gasification process.

Various thermochemical processes take place in a limited supply (26-33%) of the oxidizer (air or oxygen) in a specially designed reactor commonly referred to as biomass gasifier. In this reactor, the biomass particles undergo drying, pyrolysis, oxidation and char reduction reactions to generate a gaseous mixture of combustibles namely carbon-monoxide, hydrogen and methane, and diluents namely carbon dioxide and nitrogen [Sharma, 2008].

In the drying zone biomass materials are dried at temperature above 100°C, carbonization takes place above the heath/combustion zone at temperature between 600°C-800°C converting biomass materials into charcoal giving off nitrogen, methane and some tar. In the oxidation zone/heath combustion of biomass takes place resulting in carbon dioxide and water vapour. Various high temperature chemical reactions take place in the reduction zone below the oxidation zone; the carbon dioxide from combustion reacts with carbon and are reduced to carbon monoxide. The water vapour also reacts with carbon and forms carbon monoxide and hydrogen; then the hydrogen reacts with carbon dioxide and form carbon monoxide and water vapour. The hydrogen also reacts with carbon to form methane. It is in this zone where a large proportion of syngas is formed.

1.3. PROBLEM STATEMENT

In the year 2000, renewable energy resources were estimated to contribute 11278 GWh/anum mainly from fuel wood and waste in South Africa. Biomass provided up to 80% of rural domestic energy in 2003; other renewable energy development opportunities have been explored since 1998 in the field of solar power, pumped storage and hydro-power schemes. The white paper on the energy policy for South Africa sets up a ten years target of 10 000 GWh renewable energy contribution to the final energy consumption by 2013 in addition to the existing contribution [Department of Minerals and Energy, 2004]. Small scale biomass gasification was active in South Africa a long time ago [Miles, 1999]. These gasifiers can be traced to farms where they were used mainly for powering engines used for water pumping during the 1950's to 1970's. Currently no large scale projects are taking place in the country. This research sought to revive the use of biomass gasifiers with an intention to employ these technologies in improving the livelihood of rural people.

There currently exist saw mills in rural areas of South Africa that operate and generate large volumes of biomass waste, most of which are burned in furnaces as a means for waste management. The inefficient burning of these wastes in furnaces results in greenhouse gas emissions and fine soot that accumulates in houses that are in close proximity to the saw mills. The biomass waste can be used as fuel for biomass gasifiers and generate low-cost electricity that can be used to support community based business ventures. The major problem with the available biomass gasifier systems is the high costs of building them. This research investigated the strategies that can be employed to bring down the cost of building the System Johansson Biomass Gasifier, through an investigation of the operation of its various components.

1.4. RESEARCH OBJECTIVES

The gasification project at Melani village is a pilot project, so it will direct the course of other similar projects. The objectives of this research are to establish the economic and technical viability of the pilot plant and develop the basis for the implementation of the project, and to investigate the operation of the technology with a view to develop strategies to improve the technology; to do this the following aspects have been monitored.

i. The socio-economic status of the Melani community and community needs.
ii. The economic aspects of the project.
iii. The efficiency and effectiveness of the gasifier system and cyclone dust collector.
iv. The quantity of energy in fuel compartment condensates and their influence on gasifier efficiency.

1.5. THESIS STATEMENT

In light of the problem and the objectives stated earlier on, the thesis of this work is to investigate the possibility of using biomass energy in an efficient and effective manner to improve the livelihood of the rural poor. The high cost associated with biomass gasifiers can be avoided through improvement of gasifier systems components. The efficiency of a gasifier system is the major determining factor of its cost, so is the efficiency and effectiveness of other downstream components. Therefore this research investigated the efficiency of the System Johansson Biomass Gasifier (SJBG) reactor and that of the cyclone dust collector used in the system. The research also investigated the socio-economic status of the community where the project was to be implemented. The financial prefeasibility study as well as the availability and suitability of biomass waste for gasification using the SJBG were also investigated. The conclusion drawn from the latter investigations will direct the course of other biomass gasification projects in the country paving a way for the revival of biomass gasification and improvement of the socio-economic status of the

rural poor, while taking advantage of the large volumes of biomass materials that are available in these areas and solving the waste management problem.

1.6. DELINEATION AND LIMITATIONS

This research was based on the implementation of the System Johansson Biomass Gasifier (SJBG) at Melani village; the gasifier is a South African invention that was chosen by Eskom for implementation of the Melani biomass gasifier project. This research did not compare the SJBG with other technologies because the results of the comparison were not going to influence the decision by Eskom on which technology to use. This is basically because Eskom had previously conducted research on the SJBG and they were convinced that it could be used in this pilot project. This research focused on the technical and financial aspects of the Melani project and gave a broad overview of the Melani village community. This research did not focus on the details of the socio-economic impact of the project; however it was later recommended that this be investigated. The research method used to conduct the socio-economic status of the community had some limitations because the questionnaire was administered to community leaders only but the research findings were endorsed by the community members at a meeting in the community centre.

A thorough investigation of the technical aspects of the gasifier with special emphasis on the efficiency of the reactor and the cyclone dust collector was undertaken with a view of developing strategies to improve their efficiencies. Improvement of the efficiencies of the two components could imply a low cost for building the system. It was established that the reactor already operates at maximum efficiency however there was a need to investigate the impact of fuel compartment condensates on gasifier efficiency as this information was not available. This research did not pay any attention to the gas engine used on the gasifier system because its conversion efficiency is dependent on the efficiency of the generator used. This research also developed strategies to improve the particle collection efficiency of the cyclone, the corona effect was suspected to have been happening when the cyclone was supplied with 3kV DC, this was not further investigated because the objective of the research

could be achieved at 2kV DC and the corona effect was thus outside the scope of this work.

1.7. RESEARCH QUESTIONS

The research sought to answer the following questions:

- Is it possible to employ biomass gasification and provide low-cost electricity to rural communities living in areas endowed with biomass waste?
- Can biomass gasification projects be successfully established in South Africa?
- Is it possible to develop strategies to improve the efficiency and effectiveness of biomass gasifier components?

1.8. RESEARCH APPROACH

The System Johansson Biomass Gasifier™ (SJBG) consists of the gas producer, purification unit, and the generator for electricity generation. The purification unit consists of the cyclone, gas scrubber/cooler, particle interference sawdust filters and engine safety filters. A questionnaire was used at the village to collect data on the population demographics, the socio-economic status of the community and community needs. A bakery and grain mill were identified as possible business ventures that could be supported by low-cost electricity from the gasifier system for the community. The gasifier will provide low-cost electricity to the two community business enterprises negating the use of high cost electricity from the national utility grid.

The System Johansson Biomass gasifier (180Nm^3/h) was studied through the use of a custom built gas and temperature monitoring system and available data collected by CSIR, Eskom and Johansson (system inventor). Measurements were undertaken at the 180Nm^3/h unit before the installation of the 300Nm^3/h unit to establish the cold gas efficiency and the effectiveness of the gas purification unit with the view to improve the gasifier system. A study of the availability, properties and suitability of off-cuts generated by the sawmill operator was undertaken; the results indicated that

there were enough off-cuts suitable for gasification using the SJBG. Financial forecast was also undertaken to establish the financial viability of the project. The system was later built and installed at Melani village.

1.9. RATIONALE OF THE STUDY

The majority of people in under-developed and developing countries such as South Africa live in rural areas that are located outside the national electricity grid. In some cases they have access to electricity and other energy services, which they cannot afford. Most of these people are ranked amongst the poor with a very low level of literacy and skills that could assist them in securing employment elsewhere. In the case of such communities in South Africa, there are saw mills that operate and generate large volumes of biomass waste in rural areas where they live; most of these pose some challenges in terms of waste handling. This was found to be the case at Melani village in the Eastern Cape Province of South Africa.

The main aim of this project was to turn the biomass waste into a valuable resource that could be used for community economic empowerment, and to establish the technical and economic viability of biomass gasification using the downdraft System Johansson Biomass Gasifier as well as developing strategies to improve the technology; and to contribute general knowledge in the biomass gasification field. A business model was developed to suite small scale biomass gasification for electricity generation at Melani village. The business model, which included the establishment of small business enterprises for community empowerment could be employed in any rural area endowed with biomass resources.

1.10. DEFINITION OF TERMS AND CONCEPTS

The research's key words are presented here below, they are used and therefore should be understood as defined in this section unless the context otherwise indicates;

- Gasifier means the reactor component of the gasification system.
- Gasifier system means the reactor, its associated purification unit and the gas engine.
- Heath means the combustion zone of the gasifier.
- Raw gas refers to the gas that has not passed through all the components of the purification unit; it contains some impurities such as tar and fine carbon particles.
- Fuel compartment condensates refers to water driven off from the fuel in the carbonization zone of the gasifier, the water condenses against the walls of the gasifier in the fuel hopper and gets drained out through a condensates trap.
- Turn down ratio means the minimum quantity of fuel needed in the gasifier for it to operate without producing tar laden gas.
- Stoke's law states that the magnitude of the resistive force on a very small spherical object of radius r falling slowly through a fluid of viscosity η with speed v is given by $F_r = 6\pi\eta r v$. This equation came to be known as Stoke's law [Faughn *et al*, 2006].

1.11. CHAPTER OVERVIEW

Chapter 2 gives a review of the relevant literature; it starts with an overview of the System Johansson Biomass Gasifier, giving the details of the theory behind the operation of the various components starting with the gasifier. Much emphasis is given to the operation of the gasifier since it is the main component of the system and the cyclone dust collector since it is the first component that forms the purification unit. The cyclone was to be modified later through a different design to improve its particle collection efficiency. The chapter then looks at the factors influencing the efficiency of biomass gasifier systems with much emphasis on the fixed bed types.

Chapter 3 details the methodology employed in data collection, this chapter presents the development of the data acquisition system used to measure the gas and temperatures in the gasifier in order to establish gasifier conversion efficiency. The various components that made the data acquisition system are fully described with the aid of literature and diagrams. This chapter also gives details on the development of the cyclone dust collector with internal electric field as well as the methods employed in monitoring the performance of the cyclone. The methods used to investigate the impact of fuel compartment condensates on gasifier efficiency are also presented in this chapter. The community socio-economic status survey strategy is also presented in this chapter.

Chapter 4 presents the results and discussion part of the research, the results obtained using the methods presented in chapter three are presented and discussed in this chapter with the aid of literature where necessary. The researcher's knowledge and understanding of the various concepts is also used to analyze the results presented in this chapter.

Chapter 5 presents the conclusion and recommendations part of the research. The chapter covered the summary of the findings of the research where the major findings of the research were presented. The summary of the research contributions is also presented in this chapter, so is the major conclusions and recommendations for further research.

CHAPTER 2

LITERATURE REVIEW

2.1. INTRODUCTION

In dealing with the operation of the gasifier, the gasification process and different components of the gasifier should be explained. In this section, much emphasis was given to the operation of the reactor/gasifier and the cyclone. This is because the gasification process takes place in the reactor and therefore its conversion efficiency is of paramount importance. The conversion efficiency of the engine/generator depends on the generator used; hence it was not important to undertake an in-depth literature study into the engine/generator set. The cyclone dust collector was given much attention as it is the first unit in the downstream gas purification units. It was established through literature review that improvement of the particle collection efficiency of the cyclone could negate the use of some components that form part of the purification unit further downstream, implying a reduction in manufacturing costs and a reduced return on investment period.

Gasification efficiency is an important factor that is used to determine the technical operation and the economic feasibility of using a gasifier system. On average 1kg of fuel produces about 2.5m^3 of syngas consuming about 1.5m^3 of air for partial combustion [Schapfer and Tobler, 1937]. For complete combustion of wood about 4.5m^3 of air is required. Thus biomass gasification consumes about 33% of the theoretical stoichiometric ratio for wood burning [Rajvanshi, 1986]. This is the equivalence ratio. This section discusses the various factors influencing the efficiency of fixed bed biomass gasifiers. Although examples of other types of gasifiers studied are also used to explain certain concepts, these were chosen because factors affecting their efficiency are also common to those affecting the efficiency of fixed bed gasifiers. Much emphasis is given to the three main fixed bed gasifier types namely the updraft, downdraft and crossdraft gasifier.

The gasifier under study is a downdraft type and generally updraft gasifiers are known to have higher conversion efficiency than downdraft gasifiers due to their high rate of charcoal burnout. However they produce tar-laden gas, which is not suitable for engine applications, or require a delicate gas purification operation. In contrast downdraft gasifiers produce tar free gas or gas with very little tar quantities suitable for engine applications. However these gasifier types pose limitations in terms of scaling up, which makes them suitable for only small scale applications (up to 30MWe). This section looks at the factors affecting the efficiency of biomass gasifier systems in order to generate an understanding of this important aspect before developing strategies to improve the operation of the System Johansson Biomass Gasifier™. This is important because tampering with downstream components can also affect the efficiency of gasification.

2.2. COMPONENTS AND OPERATION OF THE SYSTEM JOHANSSON BIOMASS GASIFIER

Basically, the fuel is fed into the reactor where the gasification process takes place resulting in the formation of syngas. Syngas is channeled through a system of pipes to the downstream processes that consists mainly of the purification unit where it is cleaned of impurities such as fine carbon particles. The gas is then used to drive the engine that drives the generator and generates electricity. Figure 2.1 shows the schematic diagram of the System Johansson Biomass Gasifier (SJBG).

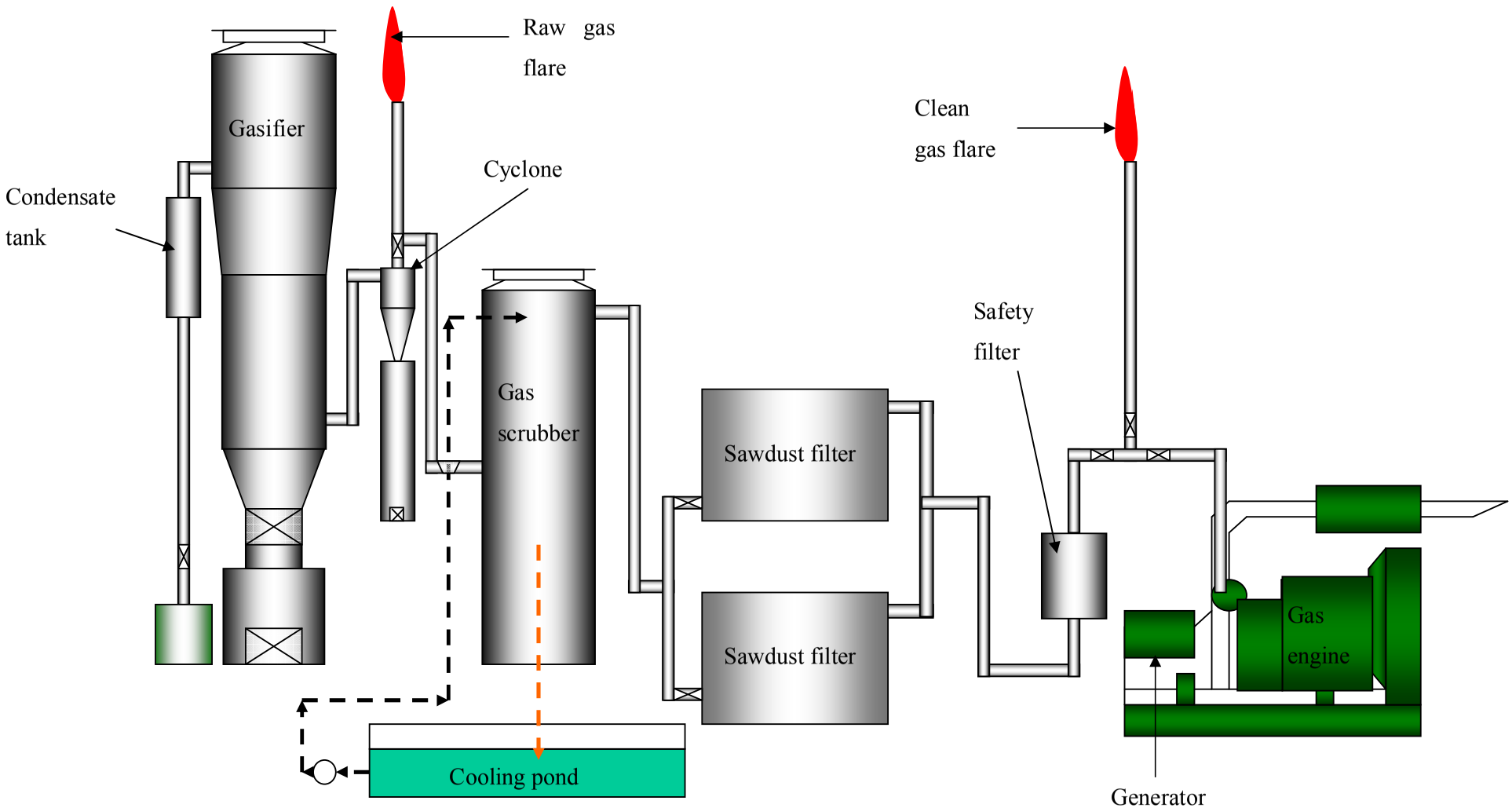

Figure 2.1: Schematic diagram of the gasifier.

2.1.1. Reactor/gasifier

The Johansson Biomass Gasifier reactor is of a downdraft type developed through modification of the Imbert downdraft gasifier [Johansson, 2002]. The reactor/gasifier is available in five different standard design sizes from 120Nm^3/h to 850Nm^3/h gas production, and five different special non-standard sizes from 1100 to 2400Nm^3/h gas production [Johansson, 2002]. The one installed at Melani village is a 300Nm^3/h gas production unit. The fuel is fed into the reactor through the top loading zone. To start the gasifier, the ignition of the reactor is done by inserting two or three sparklers, locked in a sparkler holder with handle, through the igniter sleeve. In the reactor, biomass is heated by combustion. Four chemical processes can be distinguished namely drying, pyrolysis/carbonization, oxidation and reduction reactions.

The gasifier/reactor is divided into four zones according to these chemical reactions. Combustion occurs in the oxidation zone. Introduced air in the oxidation zone contains (besides oxygen and water vapours) inert gases such as nitrogen and argon. These inert gases are considered to be non-reactive with fuel constituents. The oxidation takes place at the temperature of 700-2000°C.

Heterogeneous reaction takes place between oxygen in the air and solid carbonized fuel (Charcoal), producing carbon monoxide. Hydrogen in the fuel reacts with oxygen in the air blast, producing steam. Combustion is described by the following chemical formulae:

$$C + O_2 \rightleftharpoons CO_2 + 401.9 kJ/mol \quad (2.1)$$

$$H2 + \tfrac{1}{2}O_2 \rightleftharpoons H_2O + 241.1\ kJ/mol \quad (2.2)$$

The gas forming reactions that take place in the reduction zone of the gasifier are as follows:

Boudouard reaction

$CO_2 + C \rightleftharpoons 2CO - 164.9 kJ/mol$ (2.3)

Water-gas reaction

$C + H_2O \rightleftharpoons CO + H_2 - 122.6 kJ/mol$ (2.4)

Water shift reaction

$O_2 + C + 3H_2 \rightleftharpoons CO + H_2O - 42.3 kJ/mol$ (2.5)

Methane production reaction

$C + 2H_2 \rightleftharpoons CH_4 + 75 kJ/mol$ (2.6)

$O_2 + C + 3H_2 \rightleftharpoons CH_4 + H_2O + 205.9 kJ/mol$ (2.7)

Chemical reactions represented by equations 2.3 and 2.4 are the main reactions taking place in the reduction zone and they are endothermic, this results in temperature decreasing during these reactions [Quaak *et al*, 1999, Reed and Das, 1988 and Stassen, 1995]. The hot gases and charcoal coming from the oxidation zone provide the energy required for the reduction chemical reactions to take place. As these reactions proceed the temperature inside the reactor sinks progressively until it becomes as low as 700°C. This implies that the extent of reduction reactions is dependent on the amount of energy entering the reduction zone and consequently also on the heat losses from the reactor [Barrio *et al*, 2007].

Carbonization is the thermal decomposition of biomass fuels in the presence of 26-30% of oxygen at temperature ranging from 450°C to 600°C. This process results in the release of charcoal, organic vapours and gasses [van de Beld, 2004 and Oregon Department of Energy, 2004]. The ratio of products is influenced by the chemical composition of biomass fuels and the operating conditions of the gasifier. Yields of primary carbonization products depend on temperature. For instance charcoal yield decreases and the gas yield increases with temperature [van de Beld, 2004]. This is because the charcoal is converted to gas, but at extremely high temperature the gas formed gets combusted resulting in low gasifier efficiency as explained in this chapter.

The heating value of gas produced during the gasification process is low (4-6 MJ/Nm^3), or about 10% to 15% of the heating value of natural gas [Stassen, 1995].

2.1.2. Automatic variable speed ash grate activator

The gasifiers are fitted with an automatic variable speed ash grate activator and with ash removal and refueling systems for non-interrupted, continuous working. They are also supplied with electronic fuel level indicators and with an early refueling warning system. An electronic flashing red light ash removal warning system is also provided [Johansson, 2002]. This allows for a smooth uninterrupted 24 hours operation.

2.1.3. The cyclone

The raw gas is passed through the cyclone, which removes the coarse carbon particles from the raw gas. When operating at full gasifier/engine power, the conventional fixed cyclone removes about 80% of the carbon particles and soot, or about $4g/m^3$ of gas, leaving the remaining about 20% fine carbon and soot particles or about $1g/m^3$ of gas and this is carried through to the gas scrubber/cooler. If the power output is reduced, the cyclone starts to lose efficiency [Johansson, 2002]. This is basically because of the reduced centrifugal forces as explained later in this section.

The SJBG cyclone is a conventional cyclone. Typically, a particulate-laden gas enters tangentially near the top of the cyclone. The gas flow is forced into a downward spiral simply because of the cyclone's shape and the tangential entry. Another type of cyclone (a vane axial cyclone) employs an axial inlet with fixed turning vanes to achieve a spiraling flow. Centrifugal forces and inertia cause the particles to move outward, collide with the outer wall, and then fall downward to the bottom of the device. Near the bottom of the cyclone, the gas reverses its downward spiral and moves upward in a smaller inner spiral. The cleaned gas exits from the top through a vortex finder tube, and the particles exit from the bottom of the cyclone through a pipe sealed by a spring-loaded flapper

valve or rotary valve [Cooper and Alley, 1986 and Gradon *et al*, 1998]. The clean gas exiting the cyclone is termed the overflow while the retained particles collected at the bottom are termed the underflow.

The collection efficiency of cyclones vary with particle size and cyclone design. The efficiency of particle collection is generally good for particles that are larger than 5 microns. Other cyclones have collection efficiency greater than 98% for particles larger than 5 microns and others do achieve efficiencies of 90% for particles larger than 15-20 microns [Cooper and Alley, 1986 and Gradon *et al*, 1998]. High efficiency requires higher inflow pressure. Three categories of cyclones are available and these are the high efficiency, conventional and high throughput. The high efficiency attains a higher efficiency followed by the conventional and high throughput respectively.

The cyclone performance is rated in terms of particle cut diameter (d_p) or cut size. The cut size, D_p50 for instance is the particle size which is captured 50% [Reed and Das, 1988]. The impact of particle size on collection efficiency is quantified in the following section.

2.4.1.1. Collection Efficiency model

A model can be used to determine the effects of both cyclone design and operation on collection efficiency. In this model, gas spins through a number of revolutions N_e in the outer vortex. The value of N_e can be approximated by [Cooper and Alley, 1986]:

$$N_e = \frac{1}{H}\left(L_b + \frac{L_c}{2}\right) \tag{2.8}$$

where:

N_e = number of effective turns

H = height of inlet duct (m)

L_b = length of cyclone body (m)

L_c = length (vertical) of cyclone cone (m).

Figure 2.2 shows the various dimensions of the cyclone for better understanding of the equations.

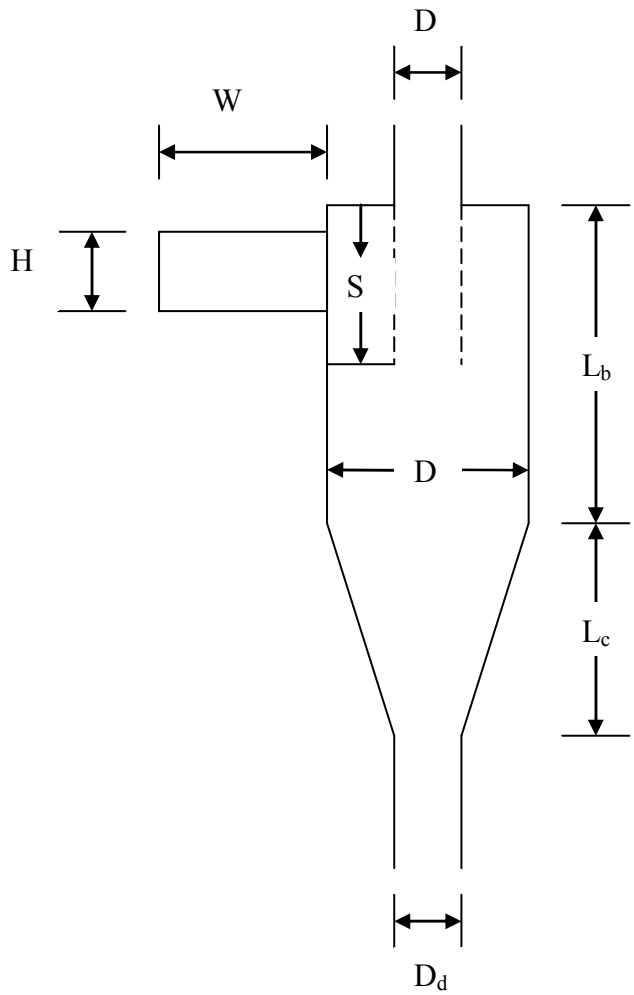

Figure 2.2: Various dimensions of the cyclone.

To be collected, particles must strike the wall within the amount of time that the gas travels in the outer vortex. The gas residence time in the outer vortex is

$$\Delta t = \frac{\pi D N_e}{V_i} \tag{2.9}$$

where:

Δt = time spent by gas during spiraling descent (sec)
D = cyclone body diameter (m)
V_i = gas inlet velocity (m/s) = Q/WH
Q = volumetric inflow (m^3/s)

The maximum radial distance travelled by any particle is the width of the inlet duct (W). The centrifugal force quickly accelerates the particle to its terminal velocity in the outward (radial) direction, with the opposing drag force equaling the centrifugal force.

The terminal velocity V_t of the particle in a radial direction that will just allow a particle initially at distance (W) away from the wall to be collected in time Δt is

$$V_t = \frac{W}{\Delta t} \tag{2.10}$$

where

W = width of inlet (m).
V_t = particle terminal velocity in the radial direction (m/s).

In addition V_t is a function of particle size. Assuming Stokes' regime flow (drag force = $3\pi\mu d_p V_t$) and spherical particles subjected to a centrifugal force F.

$$F = mv^2/r \tag{2.11}$$

where:

m = mass of particle in excess of mass of gas displaced

v = V_i of inlet flow, and

r =D/2= radius

We obtain:

$$V_t = \frac{(\rho_p - \rho_g) d_p^2 V_i^2}{9\mu D} \tag{2.12}$$

where

d_p = diameter of the particle (m)

ρ_p = density of the particle (kg/m^3)

ρ_g= gas density (kg/m^3)

μ = gas viscosity (kg/m·s).

The density and viscosity values of air and syngas are similar, since most of syngas constituents are similar to air (CO, N_2, and to a lesser extent CO_2). Only the hydrogen portion is substantially great in syngas.

Substitution of equation 2.9 into the 2.10 eliminates Δt. Then, equating 2.10 and 2.12 and rearranging to solve for particle diameter, we obtain [Cooper and Alley, 1986]:

$$d_p = \left[\frac{9\mu W}{\pi N_e V_i (\rho_p - \rho_g)} \right]^{1/2} \tag{2.13}$$

It is worth noting that in this expression, d_p is the size of the smallest particle that will be collected if it starts at the inside edge of the inlet duct. Thus, in theory, all particles of size d_p or larger should be collected with 100% efficiency [Cooper and Alley, 1986].

There are three factors that determine the centrifugal force; these are radius of spiral motion, particle mass, and particle velocity. The relationship between these factors and the centrifugal force can be described by equation 2.11. In equation 2.11, increasing the velocity of the particle (V) and/or decreasing the radius of the vortex flow (r) can increase the efficiency of separation [Holley *et al*, 2006]. However care should be taken when decreasing the size of the vortex finder as this might results in low gas flow rates impacting negatively on the efficiency of the engine as it will have to apply more power in sucking the gas.

2.1.3.1. Cyclones with external electric field

The particle collection efficiency of cyclones can be enhanced if electrical forces are employed to supplement the inertial forces. By pre-charging the particles and applying a radial electric field within the cyclone, collection efficiency is improved, in particular for smaller size particles of dielectric materials [Dietz, 1982, Plucinski *et al*, 1989].

Recently standard design cyclones with tangential inlet have been modified such that an electric field is generated between an external wall and the central outlet pipe (vortex finder). Figure 2.3 shows an example of such a cyclone designed by Gradon *et al*, 1998.

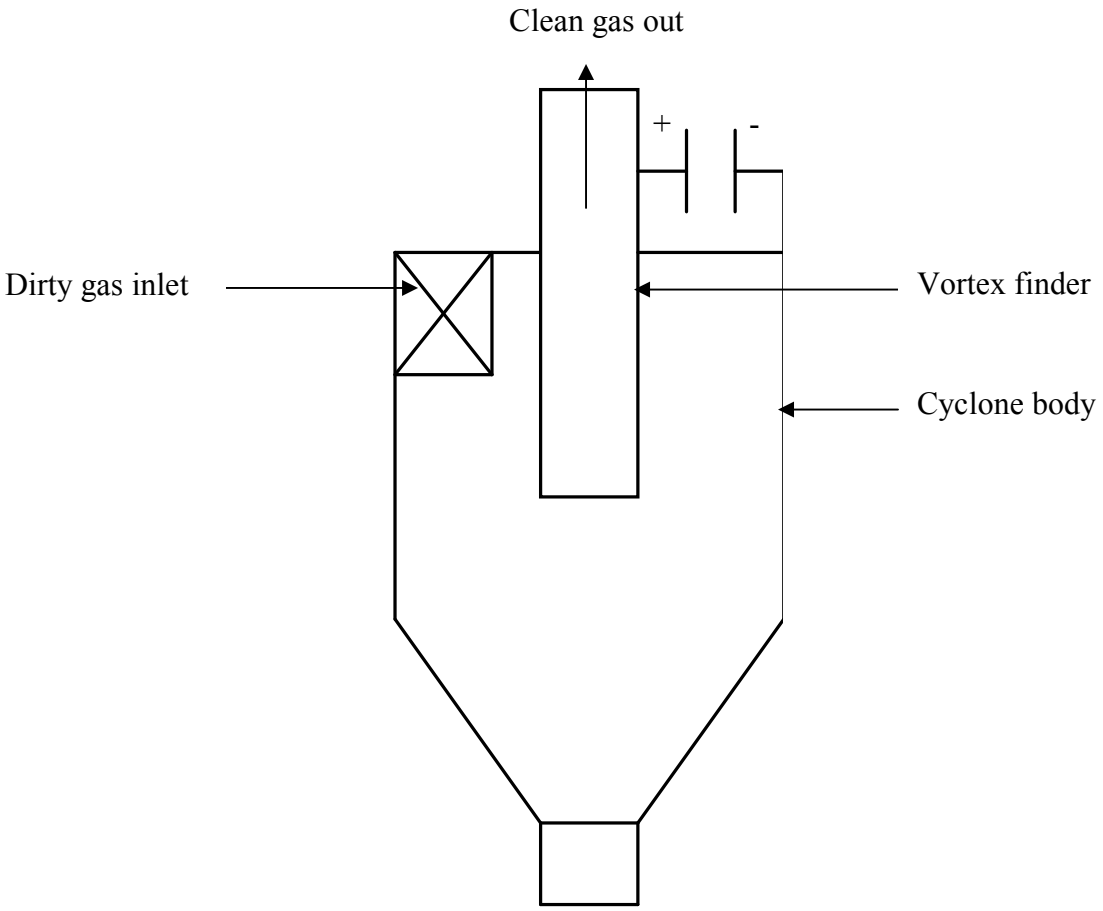

Figure 2.3: Cyclone with external electric field (Gradon *et al*, 1998).

The effect of electric field is most significant for small particles even at low gas velocities. It enhances the overall efficiency of the removal of particles at low gas velocities. Plucinski *et al* [1989] reported on the removal efficiency of particles with sizes ranging from 0.5-4μm. They established an increase in collection efficiency of the cyclone under study when the electric field was introduced. The particle collection efficiency for the cyclone before the introduction of the electric field was very low (about 44%) at low air velocity, however it increased with an increase in air velocity. This is due to the increase in centrifugal force. When the electric field was introduced, the particle collection efficiency was enhanced even at low gas velocity.

The disadvantage of electrostatic precipitators is that they collect particles inside and there is need for particle removal afterwards, which is a rather costly exercise. Cyclones with external electric field perform better than conventional cyclones for particles less than 5μm at low gas/air velocities. It was assumed that the particle collection efficiency of these devices can be enhanced further by modifying the design to generate an electric field inside the cyclone around the vortex finder. The conventional cyclone of the System Johansson Biomass Gasifier has a particle collection efficiency of 80% for particles larger than 5μm at full engine load (high gas velocity). The efficiency decreases with a decrease in gas velocity and particle size as indicated in chapter two.

2.1.4. The gas scrubber/cooler

After the coarse dust has been removed in the cyclone, about 0.8g/m^3 gas is removed in the gas scrubber/cooler, where the gas is cooled to between 20°C to 25°C with water sprayed over a suitable low resistance, large surface area scrubbing media (charcoal). The water is normally recycled through an ambient cooling pond for a long period of time [Johansson, 2002b].

Particles larger than 1μm settle by gravity and inertia in accordance with Stoke's law and can be captured by impaction, gravitational or centrifugal means. For particles smaller than 0.1μm, motion is dominated by molecular collisions in accordance with Brownian motion principles. These particles may be collected by diffusion onto a liquid surface. Particles with diameters between 0.1 and 1μm are the most difficult to capture either by diffusion or inertial mechanisms. They are too large to diffuse well but too small to settle, however they can be made to agglomerate into larger particles that are easier to collect. Agglomeration is also assisted by the presence of droplets that act as nuclei [Reed and Das, 1988].

Particles tend to move towards a surface on which condensation is taking place. This phenomenon is referred to as Stefan motion. Particles tend to migrate away from a hot

surface towards a cold surface, this phenomenon is called thermophoresis. Wetted particles tend to stick together when they collide, thereby assisting agglomeration [Reed and Das, 1988]. At the gas scrubber, the gas enters at high temperature (approximately 500°C); the gas is cooled to room temperature (approximately 25°C) before it exits the scrubber. The condensable part of the gas (water vapour) reaches dew point temperature and condenses against the charcoal and walls of the scrubber. Therefore particles will move towards these two surfaces where condensation will be taking place. The particles entering with hot gas will also move towards the cold surface in the wet scrubber enhancing their collection efficiency.

Wet scrubbers use liquid sprays, usually water, to remove particulates. Wet scrubbing requires that the water remain in the liquid phase, which requires that the syngas be cooled to below 100°C. This loss of heat may be undesirable in some systems. Most biomass gasification systems that currently use wet scrubbers do so primarily as a means to remove tars rather than particulates from the gas stream. Removing the particulates separately can prevent condensation of the sticky tars on the particulate surface, which further prevents fouling and plugging of filter surfaces. Figure 2.4 shows the packed bed gas scrubber used in the SJBG.

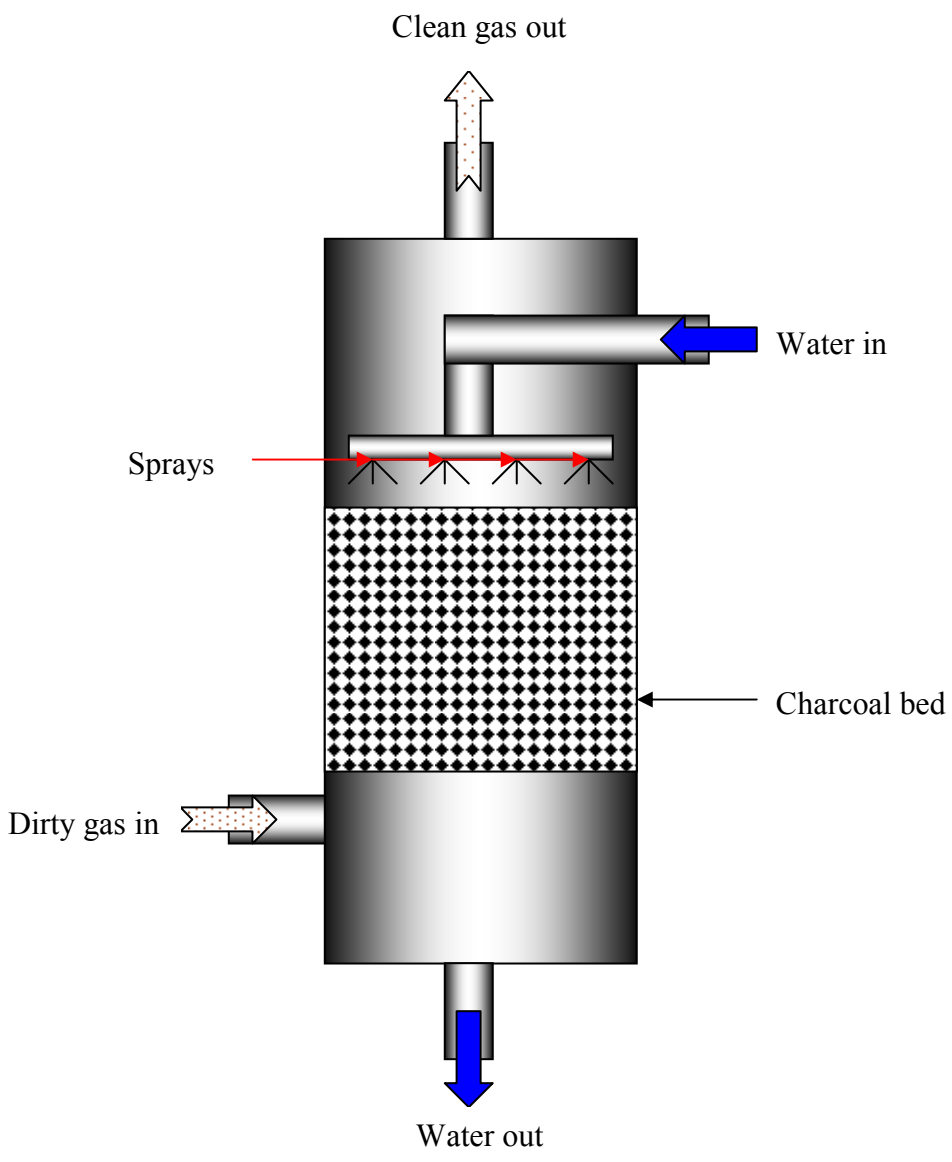

Figure 2.4: The packed bed scrubber.

2.1.5. Long life particle interference sawdust filters

After the gas cooler/scrubber, the cooled gas is passed through the long life filters, filled with particle interference sieved course sawdust filter media, where the remaining very fine non-wettable lampblack carbon dust of about 0.2g or 1g/m^3 gas is absorbed [Johansson, 2002]. This filters the fine carbon particles through adsorption.

2.1.6. Engine safety filters

Before the engine, the clean gas is finally passed through a standard 5 micron double cartridge Donaldson air filter, modified as safety gas filter with much reduced flow capacity. It is provided with a special gas-tight purpose-made seal between the dust bowl and the filter body [Johansson, 2002].

2.1.7. Gas engine

Figure 2.5 shows the gas engine that is powered by syngas to drive a 150kVA synchronous generator to produce electricity.

Figure 2.5: The gas engine coupled to a 150kVA synchronous generator.

The classical control principle of the large power synchronous generators with excitation winding is well known [Burth *et al*, 1999, Fard *et al*, 2005, Karrari, and Menhaj, 2000, IEEE Std 1110-2002, 2003, Karrari, and Malik, 2004, Karayaka, 2003, Melgoza *et al*, 2001, Shamsollahi and Malik , 1996, Stefopoulos *et al*, 2005, Venayagamoorthy, and Harley, 2000, and Wright, 1931], considering the frequency and voltage control by means of the active (P) and reactive power (Q) adjustment, respectively. The two control loops are usually operating separately from each other. Consequently, it may be considered as a scalar control (SC) procedure, which disregards some fundamental phenomena, i.e. the coupling effect inside the synchronous generator [Kelemen and Imecs, 1990, Kelemen and Imecs, 1993, and Kelemen and Imecs, 1989].

2.2. FACTORS INFLUENCING THE EFFICIENCY OF FIXED BED BIOMASS GASIFIER SYSTEMS

2.2.1. Definition of gasifier efficiency

2.2.1.1. Reactor efficiency

The average energy conversion efficiency of wood gasifiers is about 60-70% and is defined as:

$$\eta = \frac{H_g}{H_s} \tag{2.14}$$

where:

η is the gasification efficiency (%)
H_g is the higher heating value of syngas (MJ/m^3),
H_s is the average Higher Heating value of fuel (MJ/kg) [Rajvanshi, 1986].

If the gas is used for engine applications the gasification efficiency is defined as follows:

$$\eta_m = \frac{H_g \times Q_g}{H_s \times M_s} \times 100\% \tag{2.15}$$

where:

η_m = gasification efficiency (%) (Mechanical)
H_g = higher heating value of the syngas (kJ/m³),
Q_g = volume flow of syngas (m³/s)

H_s = lower heating value of gasifier fuel (MJ/kg)
M_s = gasifier solid fuel consumption (kg/s)

If the gas is used for direct burning, the gasification efficiency is sometimes defined as [Food and Agricultural Organization, 1986]:

$$\eta_{th} = \frac{(H_g \times Q_g) + (Q_g \times \rho_g \times C_p \times \Delta T}{H_s \times M_s} \times 100\% \tag{2.16}$$

where:

η_{th} = gasification efficiency (%) (thermal)
ρ_g = density of the gas (kg/m³)
C_p = specific heat of the gas (kJ/kg°C)
ΔT = temperature difference between the gas at the burner inlet and the fuel entering the gasifier (°C).

Depending on the type and design of the gasifier as well as on the characteristics of the fuel mechanical efficiency may vary between 60 and 75% whereas the thermal efficiency can be as high as 93% [Food and Agricultural Organization, 1986].

2.2.1.2. Co-generative efficiency

The electrical efficiency of the gasifier power plant depends on the efficiency of engine/ generators. This can be defined as:

$$\eta_{ep} = \frac{EP_{net}}{HHV_{bm}} \tag{2.17}$$

where

η_{ep}= Electrical power efficiency

EP_{net}= Net electrical power

HHV_{bm}= High heating value of biomass materials utilized.

The co-generative efficiency of the biomass power plant can be defined as:

$$\eta_{cg} = \frac{P_{thermal} + EP_{net}}{HHV_{bm}} \tag{2.18}$$

where:

η_{cg}= Co-generative efficiency/overall power plant efficiency

$P_{thermal}$= Thermal power [Fermeglia *et al*, 2008].

The co-generative efficiency of the power plant depends on the efficiency of the gasifier and that of the engines/generators.

2.2.2. Impact of gasifier/reactor design on efficiency

There are a number of gasifier designs; each gasifier design has its advantages and disadvantages. Attention will be given to fixed bed gasifiers, which are updraft, downdraft and crossdraft gasifiers.

An updraft gasifier has clearly defined zones for partial combustion/oxidation, reduction and carbonization. Figure 2.6 shows a diagram of the updraft gasifier. The feedstock is introduced at the top and air is introduced at the bottom and acts as countercurrent to fuel flow. The gas is drawn at the top of the gasifier. The updraft gasifier achieves the highest thermal efficiency as the hot gas passes through the fuel bed and leaves the gasifier at low temperature of around 200–300°C. The sensible heat given off by the gas is used to preheat and dry the fuel; as a result wet biomass up to 50% moisture content can still be

gasified without any pre-drying. The disadvantages of this type of gasifier are excessive tar in the raw syngas and poor loading capacity. The tar can interfere negatively with the operation of internal combustion engines. This makes this gasifier not a likely candidate for power applications [Quaak *et al*, 1999, Rajvanshi, 1986 and Mckendry, 2002]. Large quantities of liquid effluents are produced in updraft gasifiers, the liquid effluent can be highly toxic and their disposal can pose environmental and health hazards. Additional study is needed on treatment options for these liquid fuels [Stassen, 1995]. The tar and condensates contains a certain proportion of energy that leaves the gasifier without converted to useful form, there is need to quantify the amount of energy leaving this type of gasifier with tar and condensates to establish its impact on the energy and mass balance of the gasifier.

The higher efficiency that the updraft gasifier type can achieve is due to low exit gas temperature. Considering the fact that some of the energy is lost during tar removal this gasifier efficiency could be overestimated when compared to the other gasifier types. The internal energy usage in the drying of fuel results in higher condensates quantities; the condensates contain chemical energy which is lost during their removal, this energy lost also needs to be quantified.

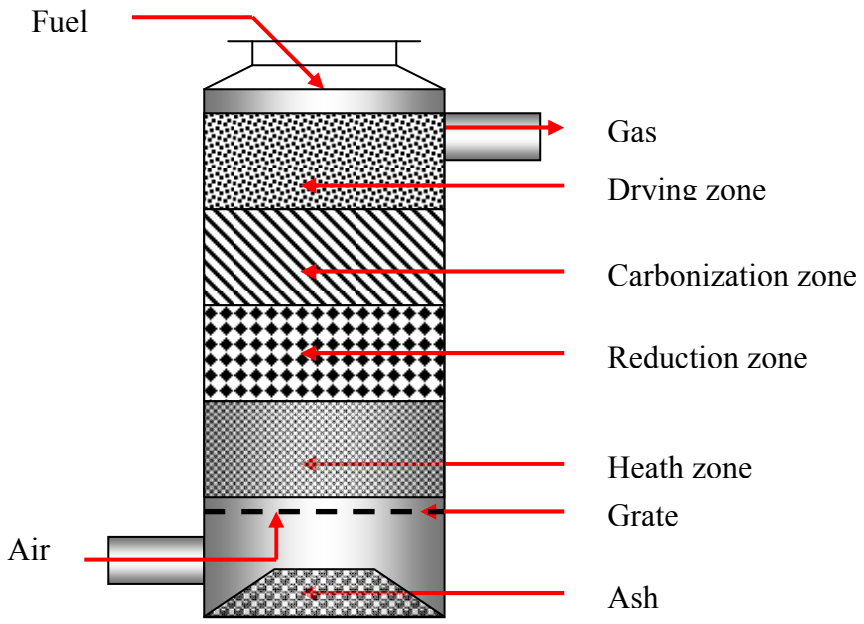

Figure 2.6: Updraft gasifier [Adapted from Quaak *et al*, 1999].

Updraft gasifiers can be scaled up while the maximum size of downdraft gasifier is probably limited to 1MWe [Mckendry, 2002] because of the uneven distribution of the gasification agent around the large gasifier throat, leading to uneven heat distribution and excessive tar production. However, for electricity generation applications, the very high level of tars in the product gas must be greatly reduced prior to the internal combustion engine to avoid problems of deposition and ultimate blockage. In the Wellman configuration studied by Brammer and Bridgewater, this is achieved by two stage cracking of the tar-laden gas, first thermally in an air-fired secondary oxidation reactor and finally in a catalytic cracker [Brammer and Bridgewater, 2002].

The problem of high tar content in raw gas is minimized in downdraft gasifiers compared to updraft gasifiers. In these gasifiers, air is introduced through orifices into downward flowing packed bed or solid fuels at the oxidation zone and gas is drawn off at the bottom. The gases leave the gasifier after passing through the hot zone, enabling the partial cracking of the tars formed during gasification and giving a gas with low tar

content. The disadvantage of the downdraft gasifier is a lower overall efficiency because gases leave the gasifier unit at temperatures about 900–1000°C [Food and Agricultural Organization, 1986 and Rajvanshi, 1986]. The thermal energy in the exit gas need to be extracted and utilized in downstream processes to improve the efficiency of gasification systems using this type of gasifier. Figure 2.7 shows the downdraft gasifier.

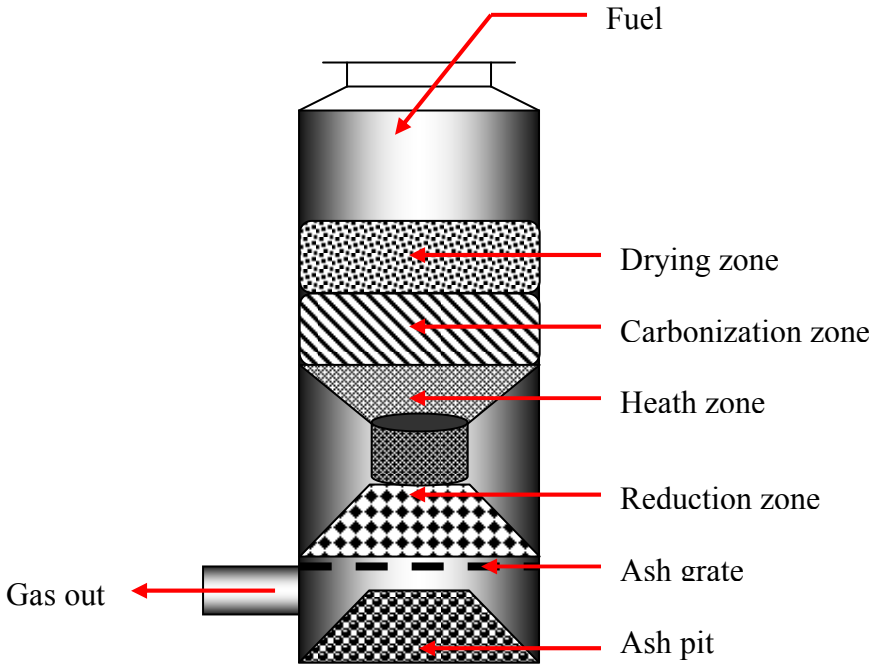

Figure 2.7: Downdraft gasifier [Adapted from Quaak *et al*, 1999].

The downdraft gasifier also experiences difficulties in handling higher moisture contents in fuel; typically requires fuel with maximum 20% moisture content. Higher ash contents pose problems in small downdraft gasifiers. The time (20-30 minutes) needed to ignite and bring the plant to working temperature with good gas quality (4-6MJ/kg) is shorter than in updraft gas producers. This gasifier is preferred to updraft gasifier for internal combustion engines [Beeneckers, 1999] because of low levels of tar in the final gas.

In a crossdraft gasifier the feedstock moves downwards while the air is introduced from the side, the gas is withdrawn from the opposite side of the unit at the same level. A hot

combustion/gasification zone forms around the entrance of the air; with the pyrolysis and drying zones being formed at the top section of the gasifier. Ash is removed at the bottom and the temperature of the gas leaving the unit is about 800–900°C; as a consequence this gives low overall energy efficiency for the process like in downdraft gasifier and a gas with high tar content like in updraft gasifier [Mckendry, 2002]. Figure 2.8 shows a diagram of the crossdraft gasifier.

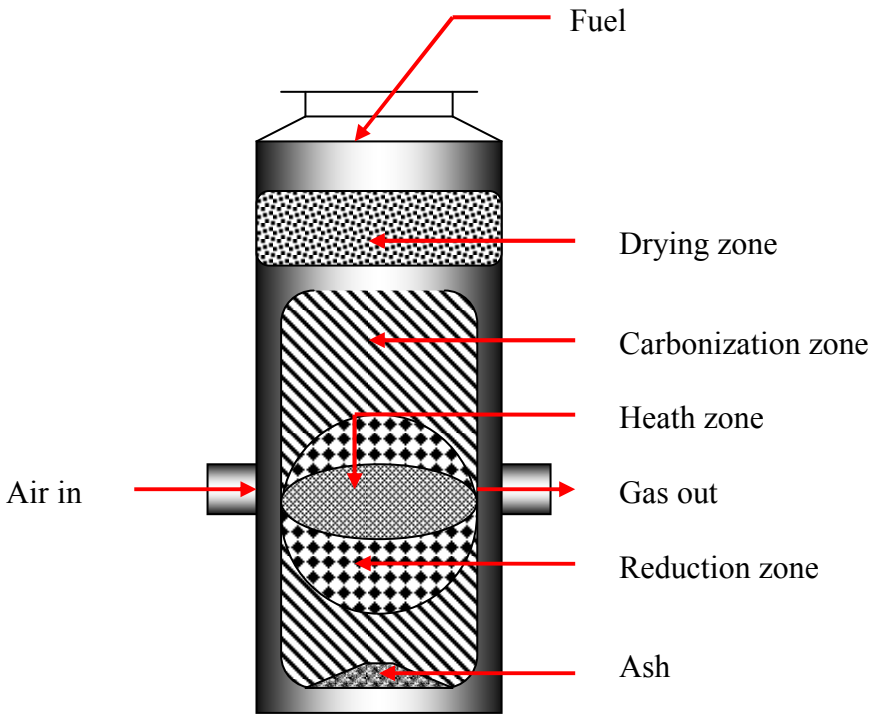

Figure 2.8: Crossdraft gasifier [Adapted from Quaak *et al*, 1999].

These design characteristics limit the type of fuel for operation to low ash fuels such as wood, charcoal and coke. The startup time (5-10 minutes) is much faster than that of updraft and downdraft gasifiers. The relatively high temperature in crossdraft gasifiers has an effect on gas composition such as high carbon monoxide, and low hydrogen and methane content when dry fuels such as charcoal is used. These types of gasifiers operate well on dry fuel [Tripod, 2006], which is normally hard to find and mostly processed from wet fuel through drying.

2.2.3. Impact of equivalence ratio on gasifier efficiency

Equivalence Ratio (ER) is a measure of the amount of external oxygen (or air) supplied to the gasifier. ER is obtained by dividing the actual oxygen (or air) to biomass molar ratio to the stoichiometric oxygen (or air) to biomass molar ratio. Oxygen is generally supplied as a gasifying and fluidizing medium. Using air in place of oxygen though economical has the negative effect of diluting the syngas due to the presence of nitrogen. Madhukar *et al* [2007] conducted simulations to investigate the impact of ER on equilibrium composition for operating conditions of Temperature (T) = 827°C and moles of steam supplied per mole of biomass (β) =0. They established that higher ER results in reduced CO and H_2 yield while that of CO_2 increases, this is due to the oxidation of H_2 and CO to H_2O and CO_2. At low values of ER, small amounts of solid carbon ($C_{(s)}$) and CH_4 are formed in the gasifier, both of which get oxidized as more air is supplied.

Higher gasification efficiencies are achieved at lower ER for fuel with higher moisture content, and higher char burnout is achieved earlier in the case of higher moisture content compared to the case of feedstock having low moisture content [Sharma, 2008]. It is not clear how this happens because a considerable amount of energy is lost in driving off the moisture in the feedstock and therefore this energy is not available for oxidation and reduction reactions. The origin of the energy consuming the char in case of fuel with high moisture content is not accounted for in the reference. There is need for further investigations of this aspect.

The heating value of the gas decreases with increasing equivalence ratio [Sharma, 2008 and van den Eden and Silva Lora, 2004] after reaching its peak at about 0.26. For fuel with higher moisture content, the heating value of the gas is higher at lower equivalence ratios, and decreases slightly at higher equivalence ratios, the heating value of the gas decreases slightly [Sharma, 2008]. Higher equivalence ratios lead to complete combustion of the feedstock and combustion of the combustible gas species in the reactor resulting in low heating value of the exit gas.

Gasification efficiency decreases at higher equivalence ratios (above 26%). This is due to the increase in temperature with an increase in equivalence ratio leading to complete combustion of the char and gas formed. Below 20% the gas heating value is reduced drastically as there is not enough air for partial combustion, therefore the temperature decreases resulting in less heat available for reduction reactions to take place. Reduction reactions are the ones that result in the major part of syngas as indicated earlier in this chapter.

Mathieu and Dubuisson [2002] investigated the impact of ER on the gas composition; they established that the composition of the gas changes with ER. The variations of the various gas species versus ER are more or less linear. N_2 and H_2O increase with ER from 35% up to 53% and from 5% up to 15% respectively. CO and H_2 decrease from 28% down to 15% and from 21% to 7% respectively. CO_2 remains fairly constant (10%) whilst CH_4 remains almost close to zero in the range 20-50% of ER. The variation in the gas composition with ER is in line with the findings by Sharma [2008] and van den Eden and Silva Lora [2004] that the efficiency increases with ER until it reaches its peak at 26% and starts to decrease. This is basically because of the changes in gas compositions as the efficiency is dependent on the volume and composition of the gas.

2.2.4. Impact of pressure on gasifier efficiency

Altafini *et al* [2003] carried out simulations to establish the impact of pressure on gas compositions through the equilibrium model. They reported that the increase in pressure results in reduced hydrogen and carbon monoxide volumes. They also established that very low pressures (10.13kPa) results in an increase in the yield of H_2, however the increase was found to be neglible (less than 0.2%). Low pressure does not provide substantial improvements and high pressure reduces H_2 yield. Atmospheric pressure is the best condition for fixed bed gasifiers. Table 2.1 shows the simulation results obtained by Altafini *et al* [2003].

Table 2.1: Equilibrium gas moles at various gasification pressures [Altafini *et al,* 2003].

P(kPa)	CO	CO_2	CH_4	H_2	Remark
10.13	0.746	0.253	$1.61x10^{-5}$	1.303	Low pressure system
50.66	0.745	0.253	$4.0x10^{-4}$	1.302	
101.3	0.744	0.254	$1.59x^{10-3}$	1.301	High pressure system
1013.25	0.633	0.286	$8.13x10^{-2}$	1.09	
2533.125	0.491	0.326	$1.82x10^{-1}$	0.897	

2.2.5. Impact of fuel properties on gasifier efficiency

A study was undertaken to establish the impact of fuel properties on gasification. Wyodak coal and cellulose (which accounts for half the weight of biomass) were used to conduct the study. A pyrolysis experiment was conducted. Nearly complete de-volatilization of cellulose was found to occur below 500°C. In contrast, only about 40% of coal was de-volatilized and only after heating to close to 900°C. The slower weight loss with coal reflects its inherently lower thermochemical reactivity and the much higher fraction of weight remaining even after heating to 900°C reflects the much lower content of volatile components in coal compared to cellulose. The remaining char was gasified. Char gasification is one of the major processes involved in converting solid fuels into combustible gases. Because of the higher reactivity of biomass chars, these gasify much more rapidly and at lower temperatures than coal chars. Thus, lower temperatures can be used in biomass gasifiers compared to coal gasifiers to achieve the same level of char conversion to gas [Williams and Larson, 1996].

Higher ash or moisture content results in lower conversion efficiency [Faaij *et al*, 1997]. There is an increase in conversion efficiency with a decrease in moisture content. This is because a high quantity of energy is consumed during the drying process and the energy

is no longer available for reduction reactions [Jayah *et al*, 2003] mentioned earlier in this chapter.

2.2.6. Effect of air temperature on efficiency

Air pre-heating has a positive impact on gasification efficiency, the high air inlet temperature (T_a) results in higher gasification efficiency as the sensible heat brought into the reactants induces an increase in reaction temperature (T_r). Mathieu and Dubuisson [2002] conducted an experiment to investigate the impact of air pre-heating on gasification efficiency. The reaction temperature was found to increase from 775°C up to 1025°C when air inlet temperature (T_a) increases from 25°C up to 800°C. Gasification efficiency increases with air inlet temperature significantly from 76.6% up to 79.5% when the feeding air is preheated from 25°C up to 300°C. Beyond 300°C, gasification efficiency still increases but only slightly from 79.5% to 80.1% when T_a goes up from 300°C to 825°C. The composition of the gas varies and the corresponding heating value is 5169 kJ/kg fuel when the air is at 25°C and increases up to 5402 kJ/kg with the air at 800°C [Mathieu and Dubuisson, 2002].

All these evolutions can be explained by the following conflicting trends:

The CH_4 production from C and H_2 being exothermic is decreased when T_r and hence T_a increase;
The consumption of CH_4 in endothermic reactions with H_2O and CO_2 is increased when T_r and hence Ta increase;
The shift reaction $CO + H_2O \rightleftharpoons CO_2 + H_2$ being exothermic, water and CO consumption decrease when the temperature increases;
The Boudouard reaction is endothermic, CO production increases at the expense of carbon and CO_2 when the temperature increases [Mathieu and Dubuisson, 2002].

High temperature air increases gasification yields leading to high gasification efficiencies. Zubtsov *et al* [2001] conducted an experiment with air pre-heated to 1000°C when gasifying Skyline coal, the resulting syngas was found to have a heating value of about 1400Kcal/m^3; without the preheated air, only 850Kcal/m^3 could be achieved. When ambient temperature air was used, the resulting low combustion temperature would prevent the reactions from reaching completion resulting in low heating value gases and low conversion efficiency [Zubtsov *et al*, 2001]; the same applies to gasification of biomass materials as indicated by Mathieu and Dubuisson [2002].

The gasification temperature not only affects the product yield but also governs the process energy input. High gasification temperature produces a gas mixture rich in H_2 and CO with small amounts of CH_4 and higher hydrocarbons. At low temperatures, solid carbon ($C_{(s)}$) and CH_4 are present in the syngas. Solid carbon is carried away and is deposited on the downstream processes. It is necessary to ensure that the syngas is free of any solid carbon. As temperature increases, both carbon and methane are reformed. At about 727°C both are reduced to very small amounts and in the process get converted into CO and H_2. This explains the increase in hydrogen moles from 627°C to 757°C. At about 757°C, the H_2 yield reaches a maximum value of about 1.33 mol. At still higher temperatures, the H_2 yield starts reducing. This is attributed to the water–gas shift (WGS) reaction (equation 2.4). According to Le-Chatelier's principle, high temperature favors reactants in an exothermic reaction thus explaining the increase in CO and reduction in H_2 (and CO_2 yield) at higher temperature. Hence, gasification temperature of about 757°C gives the highest equilibrium hydrogen yield with negligible solid carbon in the product gas [Madhukar *et al,* 2007].

2.3. PRODUCTION AND COMPOSITION OF FUEL COMPARTMENT CONDENSATES IN THE GASIFIER

Condensates are produced in the fuel compartment of the gasifier. These consist of water driven off as steam during the drying and carbonization of biomass. The water condenses against the walls of the gasifier. This water also consists of tar that dissolves in it giving it a blackish colour. The tar content of the fuel compartment condensates has been determined by the environmental water analysts (ERGOSAF) to be about 2.5g tar per litre condensates, when eucalyptus hard wood fuel was used. The South African utility company, Eskom conducted tests of the condensates for phenols and established that the condensates contained between 12.5 mg to 14.7 mg phenols per litre when eucalyptus wood was used [Carbo Consult, 2008].

Condensates occur in two forms, namely operating condensates and close-down condensates. Operating condensates are produced during operation and close down condensates are produced when the gasifier has been shut down. The quantity of condensates produced depends on fuel moisture content and the quantity of fuel left in the fuel compartment after gasifier shut down for close down condensates [Johansson, 2002].

With the Johansson Biomass Gasifier system the resulting fuel compartment condensates are drained off and prevented from running down into the heath (combustion zone) and soaking the charcoal and/or lower the temperature in the heath/combustion zone during operation.

Generally the quantity and type of tars in fuel compartment condensates depend mainly on reaction temperature: Table 2.2 shows the various types of tars produced in gasifiers at various temperatures. The gasifier is divided into four zones according to the temperature difference and chemical reactions taking place. Figure 2.9 shows the various zones of the gasifier.

Table 2.2: The various types of tars produced at various reaction temperatures [Biomass technology Group, 2008].

Compounds	Mixed oxygenates	Phenol compounds	Polynuclear aromatic hydrocarbons
Temperature	400°C	400°C-800°C	800°C-1200°C

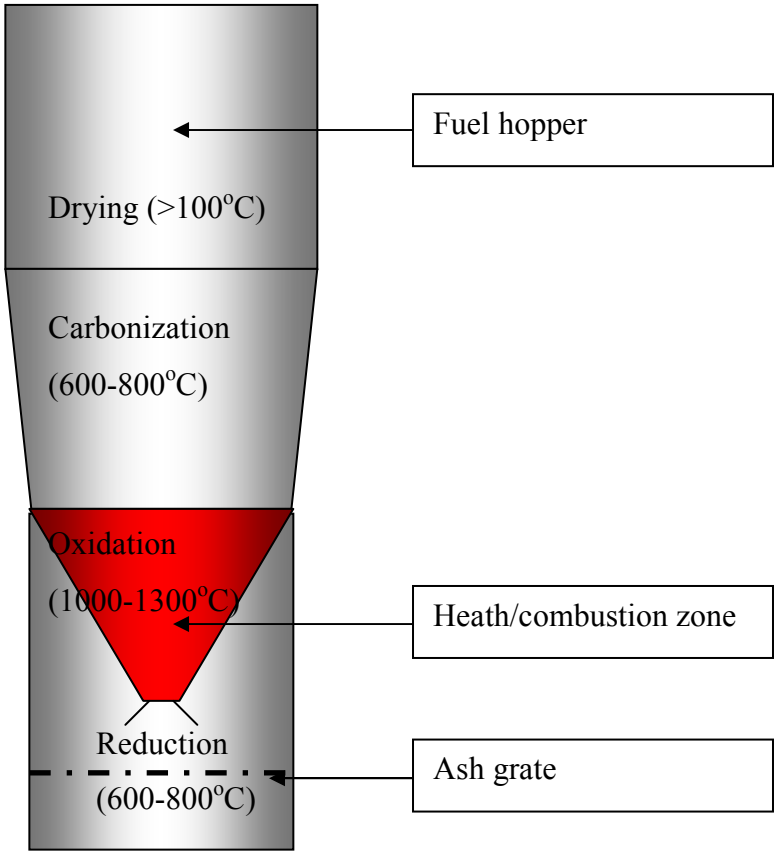

Figure 2.9: Various sections of the gasifier defined by temperature difference and chemical reactions (Not drawn to scale).

It is clear from figure 2.9 and table 2.2, the various types of tars should be present in the condensates. In the Johansson downdraft biomass gasifier system, the tar in the gas is

converted in the heath zone at temperature around 1300°C. However the tar that gets dissolved in condensates gets drained with the condensates through the condensates trap. Hence it was detected by the Eskom research team as indicated in the Carbo Consult report [2008].

2.4. SYSTEM JOHANSSON BIOMASS GASIFIER FUEL REQUIREMENTS

Most types of dry wood of sufficient density (above 200kg/m^3) can be used as wood gas producer fuel, provided that it is properly graded to suitable shape and size, that it is dry and most important, free of contamination from ash, sand, earth, stones, nails or other slag forming impurities. If pine only is used as fuel, the production of very fine non-wettable carbon particles will be much increased if compared to the relatively small fine soot production from hard wood. Coconut husks have been tested as fuel and these can also be used, provided that they are cut to suitable piece size and that the husks are mixed with nut shells or wood block fuel in order to increase the volume weight. When husks are used as fuel, the ash grate activation speed may be increased in order to get rid of the large ash/coral lime surplus resulting from coconut husks [Johansson, 2002].

When wood block fuel or coarse wood chips are used, the volume weight should preferably be above the critical 200 kg/m^3 in order to prevent fuel hang-up (for eucalyptus the wood block fuel volume weight varies between 200 kg/m^3 for Saligna and up to 360 kg/m^3 for Sideroxylon). South African pine fuel such as *Pinus Patula*, *Pinus Elliotti* and *Pinus Canariensis* wood as well as cypress wood also works well without fuel hang-up, but these fuels produce much finer light-weight soot than hard wood. Since white pine fuel may have as low volume weight as 160 kg/m^3 and coconut husks only 65 to 75 kg/m^3 it will, where such fuel is used, be necessary to mix the light weight fuel with heavier wood blocks or to incorporate fuel shake-down activators inside the gas producer fuel compartment. This is in addition to the small external rodding/inspection lids [Johansson, 2002].

CHAPTER 3

RESEARCH METHODOLOGY

3.1. INTRODUCTION

This chapter presents the various methods employed to collect the necessary data for this research. It was found necessary to develop a low cost data acquisition system to monitor the technical operation of the 180Nm^3/h gasifier before implementation of the project at Melani village. The efficiency of the gasifier was established through the use of the developed data acquisition system. An investigation into the impact of fuel compartment condensates on gasifier efficiency was also established through the use of the developed data acquisition system, the data acquisition system formed an important part of this investigation. This chapter also presents the design of the cyclone with internal electric field and how its performance was monitored. The methods employed in proximate and ultimate analysis of the biomass materials at the saw mill in Melani village are also presented in this chapter. It was necessary to establish the fuel suitability before project implementation. The strategy used to collect data on the community background is also presented here. The project financial forecasts methodology is also part of this chapter.

3.2. DEVELOPMENT OF A GAS AND TEMPERATURE PROFILING SYSTEM

The heating value of gas produced in biomass gasifiers is one of the indicating factors used in the establishment of the efficiency of biomass gasifiers. Temperature profiles tell more about the heat distribution and transfer throughout the gasifier, and heat transfer/energy transfer is also one of the indicators of efficiency. Temperature profiles in the gasifier also give an insight into the chemical reactions taking place in particular zones of the reactor.

Gas analysis in biomass gasifiers is usually undertaken with bulky and expensive components, which often require specialized facilities to operate, such equipments include Helium Neon Lasers, Quantum cascade Lasers, Fourier transform Infrared (FTIR) spectroscopy and cooled InSb detectors, gas chromatography–mass spectroscopy (GC)/MS (Mulrooney, 2007, RaviPrakash *et al*, 2007). The main aim here was to build a low cost Gas and Temperature Profiling System (GTPS) capable of monitoring gases (CO_2, CO, CH_4, and H_2) and temperature at various points of the gasifier system.

3.2.1. Components assembly

The GTPS was built from three Non-Dispersive Infrared (NDIR) gas sensors, one Palladium/Nickel (Pd/Ni) gas sensor and eight type K thermocouples. The NDIR and Pd/Ni sensors were chosen due to their fast response time, accuracy and insensitivity to other gases present in the gas mixture. Type K thermocouples were chosen because of their tolerance of high temperatures (above 1200°C). This is because temperature in the reactor reaches approximately 1300°C.

The latter sensors were assembled and connected to a data logger interfaced to a computer. A variable speed fan was used as a gas pump to ensure a steady flow rate in the 86mm supply pipe. Each gas sensor was equipped with a bacterial air vent/hydrophobic filter connected on the gas inlet to prevent the passage of aerosols; this protects the gas cells in the sensors from damage by aerosols. Figure 3.1 shows the connection of the bacterial air vent.

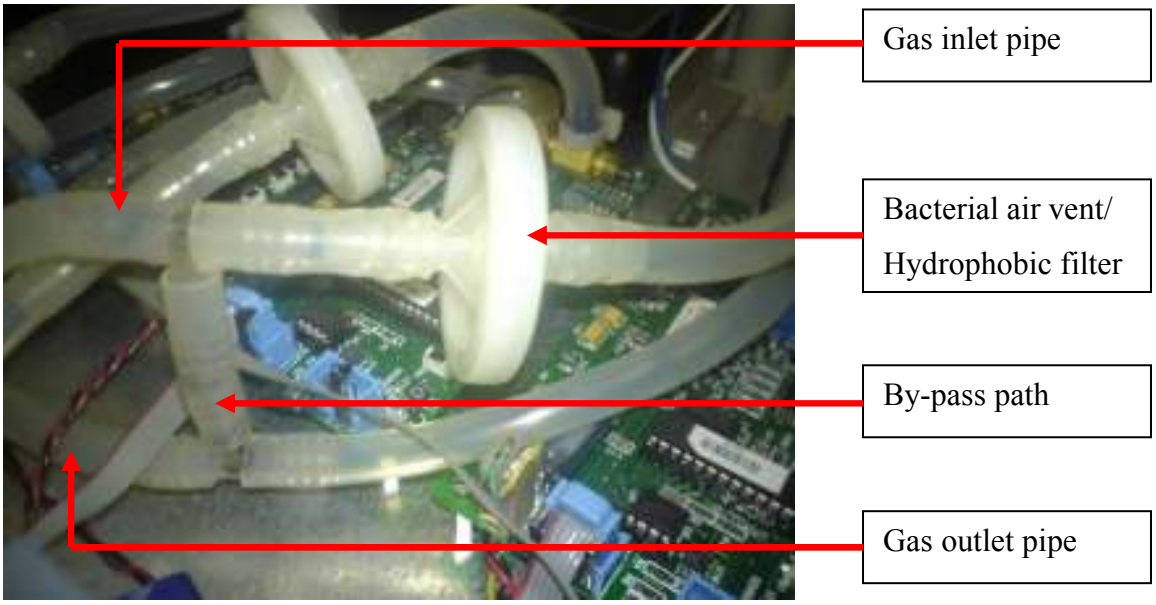

Figure 3.1: The bacterial air vent connection.

The filter also reduces the risks of fibre contamination and adsorption with laminated construction. The filter media is hydrophobic glass laminate (glass fibre/polyster) with an effective filtration area of 7.5cm^2. The maximum operating temperature for the filter is 121°C at 1kPa. The maximum operating pressure is 520kPa. The typical aerosol retention of this filter is 99.97% at 32Lmin-1100cm^{-2}. The silicon tubing was connected with a by-pass path that takes most of the flow and corrosive materials. The gas is pushed into the side of the bacterial air vent using the gas pump. Both the Pd/Ni hydrogen sensor and the type K thermocouples were connected to the same data logger as the NDIR sensors.

3.2.2. Non-Dispersive Infrared gas sensors operational theory

Non Dispersive Infrared (NDIR) technique for the measurement of various gases relies on the energy absorption characteristics of a particular gas in the infrared region [K2W Environment Equipment Co, 2004]. An NDIR gas sensor consists of several discrete components: instrumentation electronics; a sample path/gas cell of known optical length; a broadband infrared light source; and one or more infrared detectors, each with an

optical filter [Kinkade, 2005]. Figure 3.2 shows the basic components of the NDIR sensor.

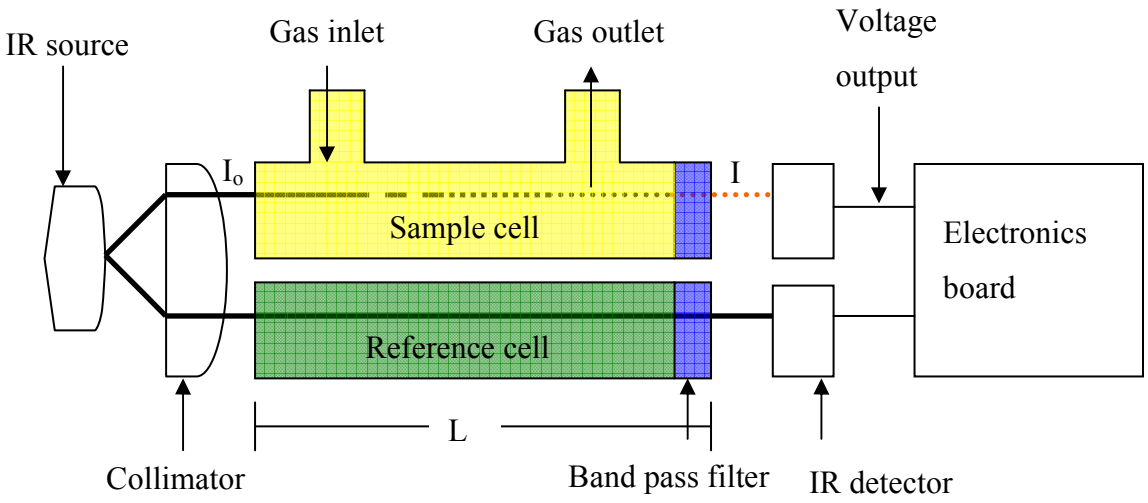

Figure 3.2: Basic components of an NDIR sensor.

Gas cells are often designed in such a way as to allow the light path to interact with the sample gas. This is normally done by using a tube that allows light to enter from one end and exit the other, where it meets the detector. There are inlet and outlet ports that allow the sample gas to circulate through the tube interacting with the infrared light, which is absorbed by the gas sample. A reference cell is also done using a similar tube with both gas inlet and outlet. The reference cell is filled with an inert gas. The incident light is measured and compared to the transmitted light in both the sampling and reference cells. The light transmitted through the sample cell is also compared to the light transmitted through the reference cell.

The absorbance (A) of the light is directly proportional to the thickness and the concentration of the sample according to the Lambert Beer Law [Mulrooney, 2007, López and Frutos, 1993, Nebiker and Pleisch, 2002, Watkins et al, 2000, Tan *et al*, 2007]:

$$A = \varepsilon cl \tag{3.1}$$

Where c is the sample concentration and l is the path length of the sample, e is the molar absorptivity. Absorbance can also be expressed as:

$$A = -Log\,\tau = -Log\,\frac{I}{I_0} \tag{3.2}$$

Where τ is the transmittance, I and I0 are the transmitted and incident intensity respectively. Equating equations (5.1) and (5.2) one obtains:

$$I = I_0 e^{-\varepsilon cl} \tag{3.3}$$

This allows the determination of c.

For accurate measurement of volume of gases without the cross sensitivity to other gas species, the specialized components of the sensor are used. These include a specialized infrared source such as the Ion Optics NL5LNC pulsable (0.5-10Hz) nichrome emitter that does not emit significant radiation at other wavelength for measurement of carbon dioxide. A narrowband filter is also chosen to match the wavelength band where the gas of interest absorbs. The pyro-electric detector can also be fitted with an optical filter to make it selective to the absorption line of the gas of interest. The advantage of using such a filter is that it ensures that the device is not cross sensitive to the presence of other gases with high absorption rate in the mid infrared region, which are present in the gas mixture. For instance, water vapour has high absorption across the mid-infrared region; however it does not have significant absorption in the region 4.23µm (CO_2 region) [Mulrooney *et al*, 2007].

3.2.3. Palladium/Nickel (Pd/Ni) gas sensor theory of operation

3.2.3.1. Background to Pd/Ni gas sensors

There exist various types of hydrogen sensors, although many of these hydrogen sensors use palladium metal to trap hydrogen, finding new materials for trapping hydrogen is still a key to the development of an 'ideal' hydrogen sensor with attributes such as chemical selectivity, reversibility, fast response, sensitivity, durability, small size, simple fabrication, simple control system, and non-contaminating as well as non-poisoning. To achieve some of these goals, Hughes and Schubert [1992] have proposed the use of thin-film Pd/Ni alloys (8 at. % < Ni < 20 at. %) for hydrogen detection. Like palladium and palladium/silver alloy, the electrical resistance of Pd/Ni thin films is a function of the absorbed hydrogen. The Pd/Ni sensors give durable and quick reversible detection of hydrogen at a concentration between 0.1 and 100% H_2 near 103kPa and 27°C. While the response time of hydrogen sensors made of pure palladium increases by over a factor of 100 upon exposure to H_2S, the Pd/Ni sensors can resist H_2S poisoning. The Pd/Ni thin-film hydrogen sensor has been proposed for many applications [Cheng *et al*, 1996]. Such applications include hydrogen leak detection.

3.2.3.2. Components and operation of the Pd/Ni sensor

The Pd/Ni gas sensor utilized is a patented Pd/Ni-extended range hydrogen sensor invented by Hughes and Schubert (US Patent N0. 5279795) [1994]. This hydrogen sensor marketed and distributed by H2Scan™ detects hydrogen concentration from a few parts per million to 100%. The sensor utilizes Pd/Ni thin films to measure hydrogen in low and high ranges. The low level sensor is a Metal oxide Semiconductor (MOS) capacitor with a Pd/Ni plate for one side of the capacitor. The high level sensor is a meandering Pd/Ni thin film resistor. The technology operates on partial pressure and does not require oxygen. There is no cross sensitivity with other combustible gases including natural gas, methane, propane and butane [Hughes and Schubert, 1994].

The resistance of the H-resistor changes as a function of the hydrogen concentration and operates up to one atmosphere of hydrogen (0.5% hydrogen in air or nitrogen). The palladium catalyzes (breaks the molecular bond of hydrogen molecule) and the hydrogen atoms attach to sites (palladium atoms) on the surface of the palladium-nickel thin film. The hydrogen atom then diffuses into the bulk of the thin film and resides in interstitial sites in the metallic structure. These interstitial hydrogen atoms increase electron scattering and increase the electrical resistance of the thin film. The change is then measured by electronics. Resistivity of metals increases with increasing temperature. H2scan™ manages this temperature resistivity by controlling the temperature of the H-resistor. A resistive thin film heater and temperature sensing resistor are manufactured on the silicon chip. The H2scan™ electronics measure the resistance of the temperature sensing resistor and control the temperature to a function of a degree centigrade through the heater resistor. The operating temperature is chosen to be higher than ambient to provide control and prevent condensation of water in higher humidity operations [Hughes and Schubert, 1994]. Figure 3.3 shows the diagram of the Pd/Ni sensor.

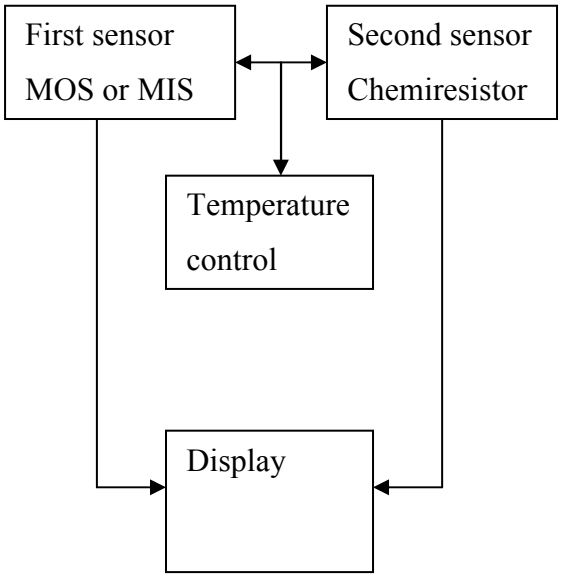

Figure 3.3: The diagram of a Pd/Ni hydrogen sensor.

The second embodiment of this sensor, the low level hydrogen sensor, is configured to measure from 10ppm to 1% hydrogen at 103kPa of pressure. The palladium-nickel thin film is used to form the Metal-Oxide-Semiconductor (MOS) capacitor. The Pd/Ni thin film is deposited on an insulating thin film that forms the dielectric between the Pd/Ni metal/dielectric interface and the presence of this atom changes the electric field of the capacitor, changing the capacitance. The change is proportional to the hydrogen concentration in the sampled gas (Lu *et al*, 2007, Hughes and Schubert, 1994). This change is then measured with electronics.

Lu *et al*, 2007 conducted an experiment using a $Ni/SiO_2/Si$ MOS capacitor and various H_2 concentrations diluted by nitrogen. They established that exposure of the sensor to higher hydrogen concentrations causes a shift of the whole Capacitance–Voltage (C–V) curve to a more negative voltage. The hydrogen-induced shift of C–V curves was similar to that of the palladium MOS sensors, which was attributed to the reduced work function of the gate caused by the formation of a polarized hydrogen atom layer at the Pd/SiO_2 interface (Fogelberg *et al*, 1995 and Eriksson and Ekedahl, 1997).

For a certain bias voltage, the response (R) is defined as:

$$R(\%) = \frac{\Delta C}{C} \times 100\% \tag{3.4}$$

where C is the capacitance in pure nitrogen and ΔC is the change in capacitance at a certain hydrogen concentration (Lu *et al*, 2007).

The two implementations of the catalytic effect of palladium on hydrogen complement one another. The sensing ranges overlap and a very wide range hydrogen specific sensor results. This sensor is useful in measuring changes in concentration of hydrogen gas and also has the ability to distinguish between hydrogen from hydrogen containing materials such as formic acid [Hughes and Schubert, 1994].

3.2.4. CR1000 Data logger

The CR1000 Data logger provides precision measurement capabilities in a rugged, battery-operated package. The CR1000 includes CPU, analog and digital inputs and outputs. The on-board, visual basic-like programming language includes data processing and analysis routines. PC400 software provides program generation and editing, data retrieval, and real-time monitoring. It has 8 differential or 16 single-ended analog inputs for measuring voltages up to ± 5V.

3.2.4. The complete gas and temperature monitoring system

Figure 3.4 shows the complete Gas and Temperature Profiling System. Figure 3.5 shows the system signal flow diagram.

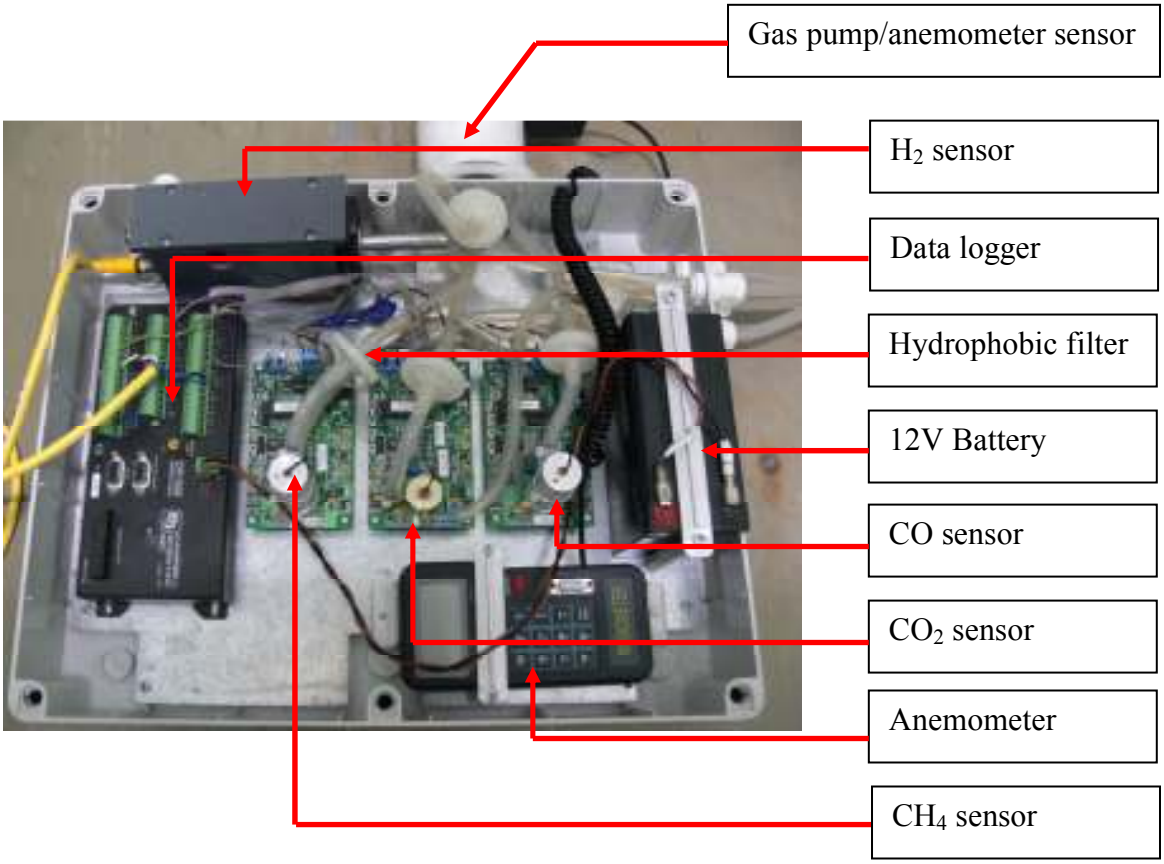

Figure 3.4: The complete Gas and Temperature Profiling System.

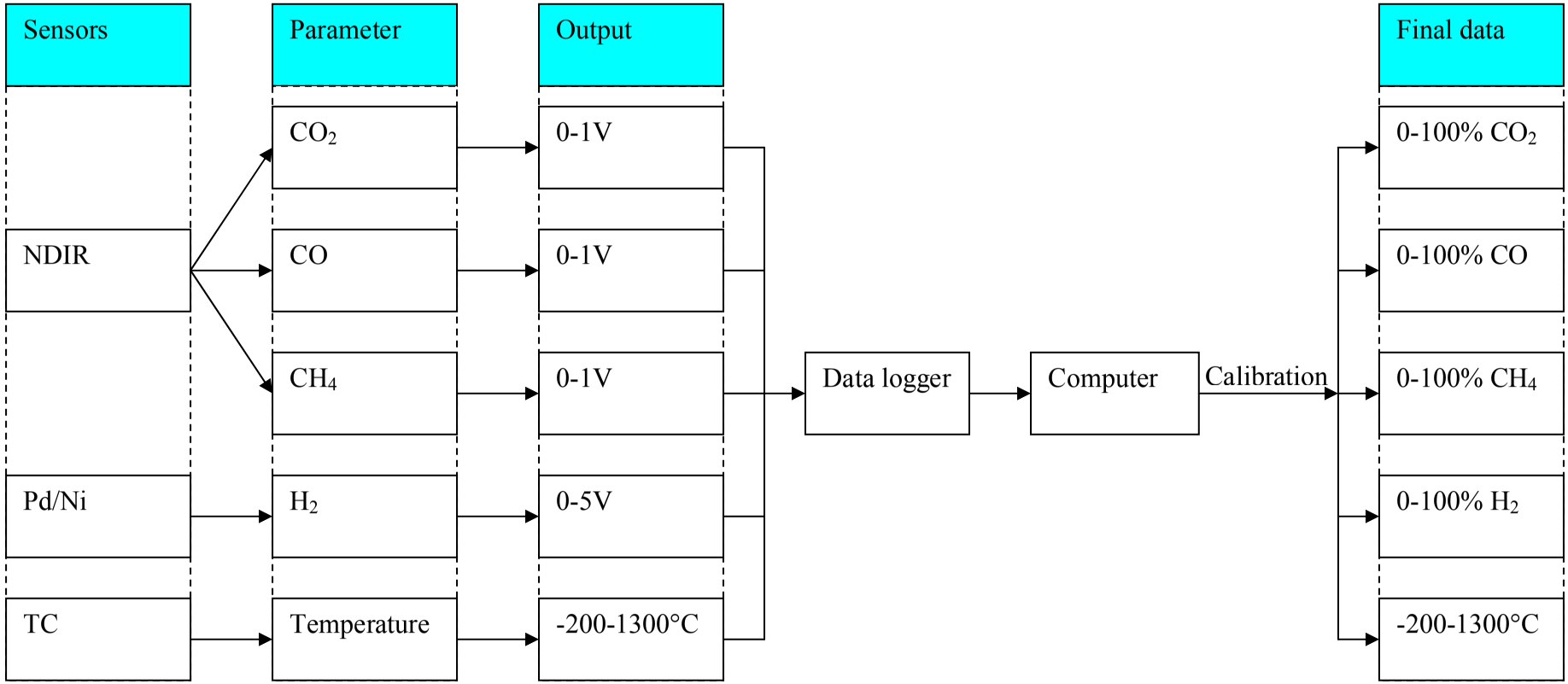

Figure 3.5: The signal flow diagram for the Gas and Temperature Measuring System.

3.2.5.1. System performance and cost analysis

The accuracy and response time for the system is dependent on that of the sensors used. The accuracy of NDIR sensors is best at 0 to 5±0.25% of the particular gas species and 5% reading from 5.5% to 100% of the particular gas species. The resolution of NDIR sensors is ±0.1% of the particular gas species on 5% of reading from 5.5% to 100% of the particular gas species [H2Scan, 2007].

Table 3.1 shows the performance parameters of the hydrogen sensor used.

Table 3.1: Performance parameters for the hydrogen sensor.

Parameter	**Performance**
Hydrogen sensitivity range	0.5% to 100% hydrogen by volume at 103kPa
Typical Response Time	Less than 30 sec
Calibration Interval	3 months
Accuracy	± (0.03 x indication + 0.2)% hydrogen by volume
Product Life Expectancy	10 years

Type K, Chromel (Nickel-Chromium Alloy)/Alumel (Nickel-Aluminium Alloy) are the most commonly used thermocouples. They are available in the -200°C to +1300°C range. The characteristic of the thermocouple undergoes a step change when a magnetic material reaches its Curie point. This occurs for this thermocouple at 352°C. Sensitivity is 41µV/°C. Type K and N are the most oxidation resistant base metal thermocouples. They are however not recommended for temperature of 1300°C for long period.

3.2.5.2. Downdraft gasifier modeling program

A downdraft gasifier simulation program developed by Jayah et al, 2003 was used to simulate the System Johansson Biomass Gasifier syngas profiles that were later compared to the gas profiles obtained using the developed Gas and temperature Measuring System

(GTMS). Jayah et al established that the kinetic model developed by Chen, 1987 could be used to investigate the performance of a downdraft gasifier with some modifications. Chen's model was developed to investigate the impact of gasifier operating conditions and fuel properties on the performance of the gasifier. The model considered the various sections of the gasifier (pyrolysis, combustion and drying) as a single zone, which led to the problem of over-prediction of the gas exit temperature from that zone due to low estimation of heat loss and the omission of carbon monoxide and hydrogen gas in the pyrolysis gas [Jayah *et al*, 2003].

Jayah *et al* used to flaming pyrolysis model developed by Milligan, 1994 in place of the algorithms used by Chen. This was meant to overcome the problem of over-estimation of the gas exit temperature from the single zone in Chen's model. Miligans's flaming pyrolysis zone model calculates the concentration of CO, CO_2, CH_4, H_2, H_2O and N_2 gases entering the gasification zone.

The change of algorithms resulted in an integration of Chen and Milligan's models. A FORTRAN computer program was written [Jayah *et al*, 2002] to calculate the characteristic profiles of temperature, gas volumes and gasifier conversion efficiency along the reactor axis. This resultant model is fully described by Jayah *et al*, 2003.

In this study the FORTRAN program written by Jayah et al was used to calculate the gas profiles from the SJBG after which the average of all gas species were taken and compared to the gas profiles obtained using the GTPS, literature and Gas Chromatograph. Table 3.2 shows the input data used to undertake the simulations.

3.2.5.3. Gas chromatograph experiment

The results from the GTMS were also compared to the results obtained by CSIR through the use of a Gas Chromatograph (GC). The GC was connected to the gas outlet pipe after the engine safety filter. The gasifier operating conditions were similar to those presented

in table 3.3 with a difference in moisture content and air inlet temperature. The fuel moisture content for this experiment was 14% and that of the experiment done with GTMS was 17%. The temperature of input air was 25°C for the experiment done with the GTMS and 30°C for the experiment done with the GC.

Table 3.2: The input data used to undertake the simulations.

Parameter	**Value**
Carbon (%)	50.6
Hydrogen (%)	6
Oxygen (%)	45
Nitrogen (%)	0.5
Fixed carbon (%)	23
Bulk density (kg/m^3)	400
Diameter of wood particle (cm)	2.5
Throat diameter (cm)	25.5
Throat angle (degree)	30
Insulation thickness (cm)	17.5
Moisture content (%)	7.14
Temperature of input air (K)	300
Feed input (kg/h)	40
Air input (kg/h)	44.5
Heat loss (J)	5.5
Thermal conductivity of insulating material ($W \cdot K^{-1} \cdot m^{-1}$)	2.2

3.3. INVESTIGATION OF THE IMPACT OF CONDENSATES ON GASIFIER EFFICIENCY

3.3.1. Experimental setup

The System Johansson Biomass Gasifier is fitted with a fuel compartment condensate trap, which traps and collects condensates in the condensate tank. Figure 3.6 (a) shows the photo of the condensate trap and figure 3.6 (b) is an illustration of the condensate trap.

Figure 3.6 (a): Photo showing the fuel compartment condensate trap.

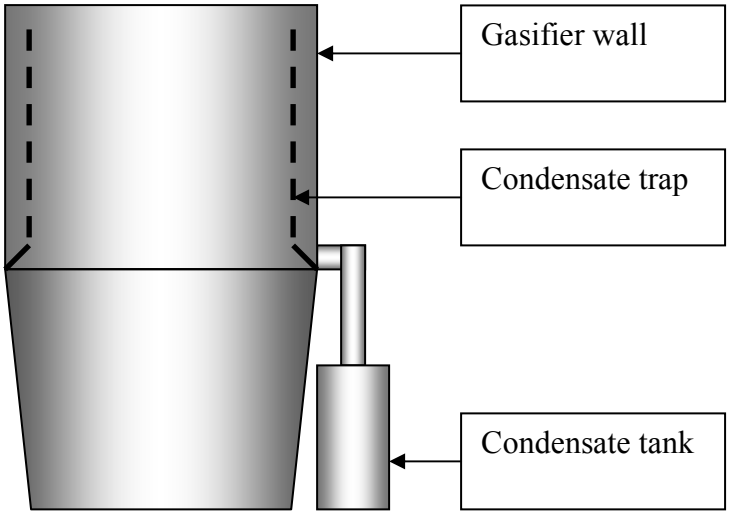

Figure 3.6 (b): Schematic of the fuel compartment condensate trap.

Figure 3.7: Bottom part of the gasifier showing the condensate tank.

The 180Nm^3/h gasifier was operated with fuel having 8.6% to 12.2% moisture content. The two test runs lasted 150 minutes with operating condensates drained after every 25 minutes of operation and quantified. Samples of these condensates were taken for laboratory analysis. The gas and temperature profiling system described in section 3.2 was used to measure the gas profiles and composition. This was done to correlate the quantity of energy in condensates and influence of condensates on gas quality (as measured by heating value) and cold gas efficiency thereof. The gas heating value was calculated using the following equation:

$$HV_{gas} = (H_{2vol\%} \times H_{2Volm^3} \times HV_{H_2}) + (CO_{vol\%} \times CO_{volm^3} \times HV_{CO}) + (CH_{4vol\%} \times CH_{4volm^3} \times HV_{CH4}) \qquad (3.5)$$

where:

HV_{gas} = lower heating value of syngas.
$H_{2vol\%}$ =% composition of hydrogen gas.
H_{2volm^3} = volume flow of hydrogen gas.
HVH_2= lower heating value of hydrogen gas.
The same applies for the other gases (CO and CH_4).

A freeze dryer was used to remove the water in condensates leaving the dry residue (hydrocarbons). The lower heating value of the dried condensate residue was determined using an oxygen calorimeter. The remaining dry residue was weighed using a balance. The condensates were dried before determination of the heating value in order to get the lower heating value of the condensates for comparison with the lower heating value of the gas. If the condensates heating value was determined directly, it would have resulted in higher heating value, which was not going to be comparable to the gas lower heating value.

The gasifier operating conditions are presented in table 3.3.

Table 3.3: Gasifier operating conditions.

Parameter	Value/Quantity
Equivalence ratio	0.26
Pressure	100kPa
Temperature (maximum)	1300°C
Air temperature (before pre-heating)	25°C
Fuel moisture content	8-15%

The pressure was obtained from a pressure sensor fitted to the gasifier.

3.3.2. Proximate and ultimate analysis of biomass materials used

The ultimate and proximate analysis of the biomass materials was undertaken. Ultimate analysis involves determination of all biomass component elements in solids or gaseous form, individually or combined. Proximate analysis involves determination of percentage by weight of fixed carbon, volatile matter, moisture and ash. Fixed carbon acts as a main heat generator during burning/gasification. High volatile matter content indicates easy ignition of fuel.

3.3.2.1. Bulk density

The volume and weight of the biomass material need to be measured in order to determine its bulk density. A laboratory balance was used to undertake weight measurements, while the volume of the samples was determined using a graduated cylinder. The average bulk density was taken from measurements undertaken on three samples.

3.3.2.2. Moisture content

A moisture meter mini 2000 model was used to measure the moisture content of the wood samples. The meter has a resolution of 1% for 6-25% Wood Moisture Equivalent (WME). It measures up to 100% WME.

3.3.2.3. Ash content

The ash content was determined according to TAPPI standard T211 om-85. Wood samples were oven dried and placed in a furnace at 580°C for 3 hours. The samples were left to cool. The ash content was calculated from the percentage weight loss of the original wood and ash residue. The average ash content was taken from three samples.

3.3.2.4. Volatile matter content

The volatile matter comprises all the liquid and tarry residues not fully driven off in the process of carbonization [Chen and Azevedo, 2005]. Volatile matter content was measured by heating weighed samples of dry off-cuts in a furnace with limited quantity of air at various temperature ranges. The weight loss was then taken as the volatile matter. The following equation was used to determine the percentage for volatile matter.

$$V = \frac{W_{t_0} - W_{t_x}}{W_{t_x}} \times 100\% \qquad (3.6)$$

where V = the volatile matter content of the sample.

W_{t_0} = the initial mass of the off-cut sample.

W_{t_x} = the mass of the off-cut sample after heated at a particular temperature range.

3.3.2.5. Elemental composition

The elemental composition was determined after dissolution of the samples in a mixture of HNO_3/HCl/HF using a microwave digestion system according to Environmental Pollution Agency (EPA) Method 3052 [Dean, 2005] and [USEPA, 2005].

3.3.2.6. Lower heating value

An oxygen bomb calorimeter (Eco Cal2K) was used to measure the lower heating value value of both the wood and dry residues/hydrocarbons samples. The calorimeter was calibrated with a 0.5g of benzoic acid before measurements were taken. The heating values of three samples from each gasifier test run/period were taken under a pressurized oxygen environment of 3000kPa. The average values were taken from these measurements. The same procedure was followed for wood samples. The heating value was expressed as lower heating value because the measured wood and/or dry residues were dried with an oven and freeze dryer respectively before measurements were undertaken.

3.3.3. Freeze dying of condensates

A bench-top manifold freeze dryer was used to remove the water from fuel compartment condensates. Samples of condensates were weighed in a laboratory scale before they were subjected to the freeze drying step. These samples were placed in freeze-drying flasks and the flasks were rotated in the shell freezer containing methanol, which is cooled by mechanical refrigeration. The flasks were placed in a bench-top freeze-dryer after which the pressure was lowered and the heat was supplied to the samples for them to sublimate. After the freeze-drying the vacuum was broken with nitrogen before the dry residues/hydrocarbons from the condensates were scrapped out of the flasks for weighing and determination of their heating/energy value.

3.3.4. Mass and energy balance of the system

The gross weight of the fuel was measured using a balance before the fuel was fed into the gasifier. The fuel consumption was calculated from the number of hours it took for the fuel in the gasifier to be totally consumed. This was done with the assistance of the Soliphant fuel level switches fitted to the gasifier. The switches have vibrating forks made in stainless steel. They have relay outputs; the load is switched via a potential free changeover contact.

The heating value of the fuel, charcoal, cyclone dust collector as well as condensates was determined through an oxygen bomb calorimeter (CAL2K). The energy input/output was calculated from the quantity of fuel, charcoal, cyclone fine carbon as well as condensates multiplied by their respective energy contents. The quantity of charcoal, cyclone fine carbon as well as that of dry condensates was measured by means of a laboratory balance. The quantity of wet condensates was measured by a graduated measuring cylinder.

3.4. DEVELOPMENT OF A CYCLONE WITH INTERNAL ELECTRIC FIELD

The collection efficiency model described in chapter two equations 2.6 to 2.11 was used by the candidate to design and establish the performance of the conventional cyclone. In the model, gas spins through a number of revolutions N_e in the outer vortex and the value of N_e can be established through equation 2.6, and this was found to be 8.5 R/s.

To be collected the particles must strike the wall within the amount of time that the gas travels in the outer vortex. The gas residence time in the outer vortex when the gas velocity is 5m/s is given by equation 2.7, and it was found to be 1.5 seconds.

For gas velocity of 10m/s, the gas residence time, also given by equation 2.7 is 0.795 seconds. The gas production and velocity in the gasifier follow the engine demand. The higher the demand the higher the gas production and velocity. The maximum gas

velocity at full load exceeds 15m/s. At that velocity, the gas production and density of particulates increases, but the increase in particulates density is counteracted by the short residence time needed for the particulates to be collected and the increased centrifugal force. The centrifugal force is much dependent on the particle diameter and velocity.

The maximum radial distance travelled by any particle is the width of the inlet duct W. The centrifugal force quickly accelerates the particle to its terminal velocity in the outward (radial) direction, with the opposing drag force equaling the centrifugal force. The terminal velocity that will just allow a particle initially at distance W away from the wall to be collected in time Δt for gas velocity of 5m/s is determined by equation 2.8 and it was found to be 0.12m/s. For gas velocity of 10m/s, the terminal velocity is 0.1431.

A solenoid was later introduced into the designed conventional cyclone, which transformed to an induction cyclone. The idea was based on the concept of force acting on a particle placed at an arbitrary point. This is in accordance with Faraday's law. Considering one of the loops of the conductive coil with radius b and charge Q, the electric field (E) at any point P, a distance z from the plane of the loop is given by the following formula:

$$E = \frac{1}{4\pi\varepsilon_0} Q \frac{z}{(z^2 + b^2)^{3/2}} \tag{3.7}$$

Any charged particle q, placed at this arbitrary point P, will therefore experience a force given by Coulomb's law:

$$F = qE \tag{3.8}$$

Figure 3.8 (a, b) show the induction cyclone design prototype that was tested.

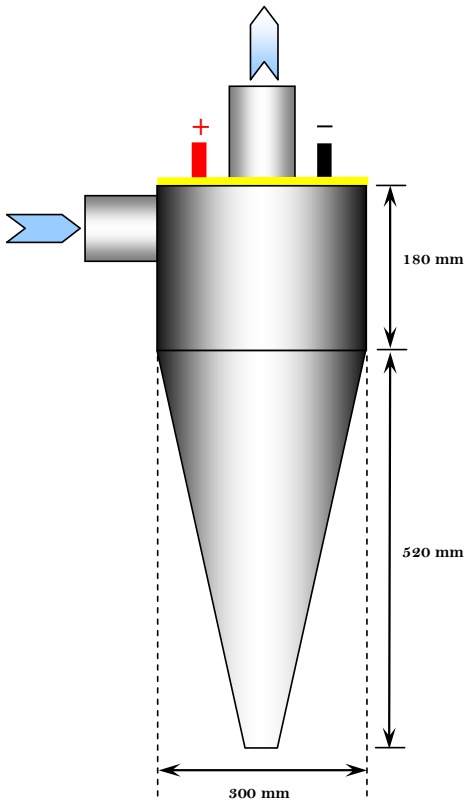

Figure 3.8 (a): The cyclone design.

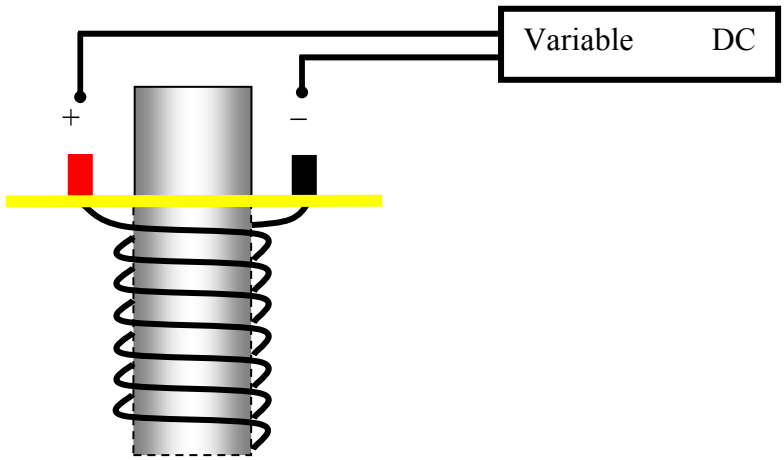

Figure 3.8 (b): Vortex finder with solenoid

The solenoid was introduced around the vortex finder as indicated in figure 3.8 (a) and 3.8 (b). The solenoid was made of a 10mm thick copper rod. The copper rod was coiled to nine loops. The solenoid was 280mm long and 120mm in diameter.

It is worth noting that the conventional cyclone designed using the cyclone particle collection model had some limitations in terms of maximizing or minimizing its parameters for maximum particle collection efficiency. Such limitations include the size of the cyclone, which is limited by the gasifier design equations. Tampering with the size of the cyclone and/or the vortex finder for instance would have affected the gas flow between the gasifier and downstream components, thereby affecting gasifier operation and efficiency.

3.4.1. Cyclone design performance monitoring

The design performance was monitored through various tests using ferrosilicon powder with particle size ranging between 2-5µm. Figure 3.9 shows the experimental setup.

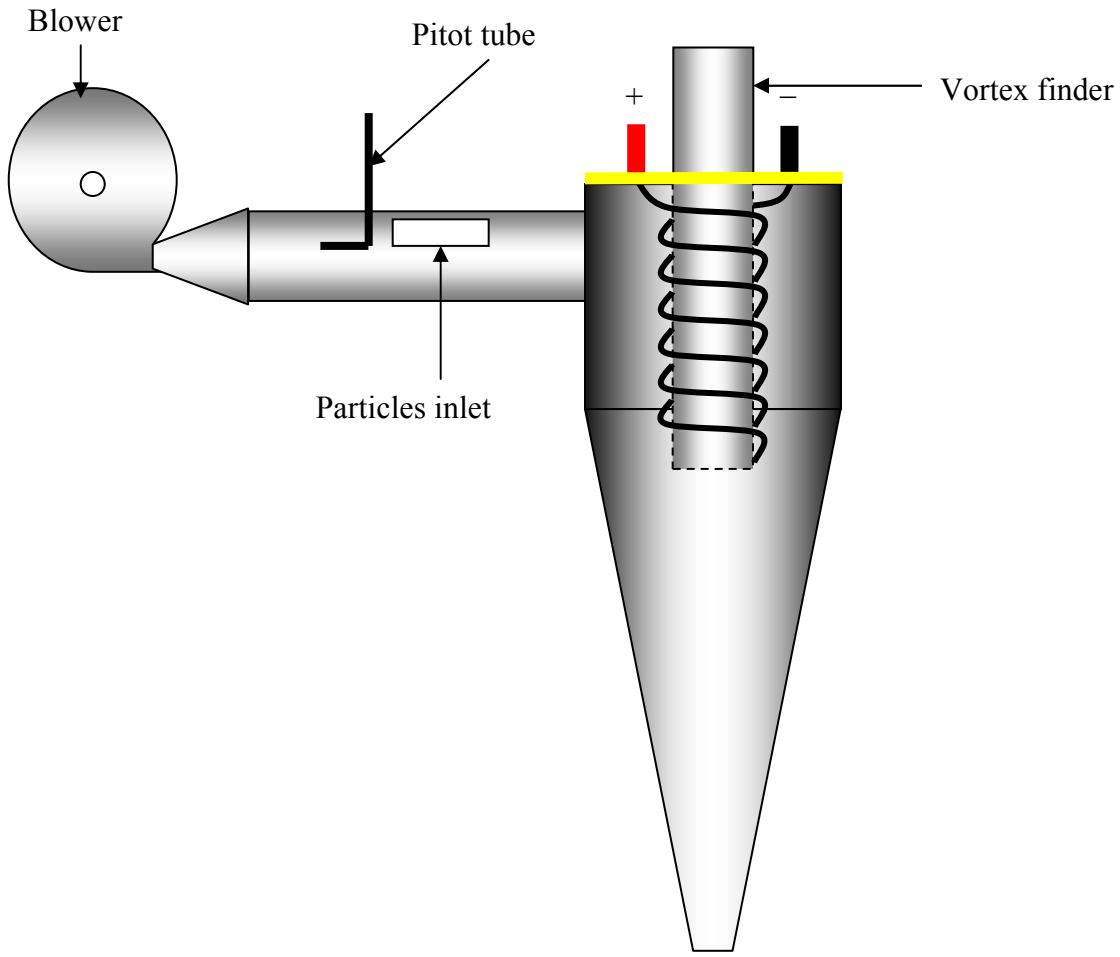

Figure 3.9: Experimental design for testing using ferrosilicon powder.

A centrifugal blower was connected to the cyclone through a 0.5m long pipe. The pipe had a lead on top for loading the ferrosilicon powder at a distance of 0.25m from the cyclone. A pitot tube was fitted between the blower and the cyclone to measure air

velocity. The known quantity of ferrosilicon powder was fed into the line before the centrifugal fan was started. The fan was then started and it blew the ferrosilicon powder into the cyclone. The underflow was collected at the bottom of the cyclone and quantified after which the cyclone particle collection efficiency was determined by dividing the underflow by the input particles as follows:

$$\eta = \frac{U(g)}{I(g)} \times 100\% \tag{3.9}$$

where:

η = cyclone particle collection efficiency.
U= the quantity of particles collected in the cyclone (underflow).
I= the quantity of input particles.

The overflow was regarded as I-U, which was not important to determine in this case. This is the quantity of particles that escaped from the cyclone. The latter procedure was repeated several times with 5m/s and 10m/s airflow velocities and with the solenoid charged and not charged at 0-3kV DC.

In addition to the experimental design shown in figure 3.9, the cyclone was reconnected to the gasifier and the gas scrubber in its position on the gasification plant. This is shown in figure 3.10. The gasifier was operated with the solenoid not inserted, when the solenoid was inserted but not charged and when the solenoid was supplied with 2kV DC. The fine dust/carbon particles collected by the cyclone was quantified under all of the latter scenarios.

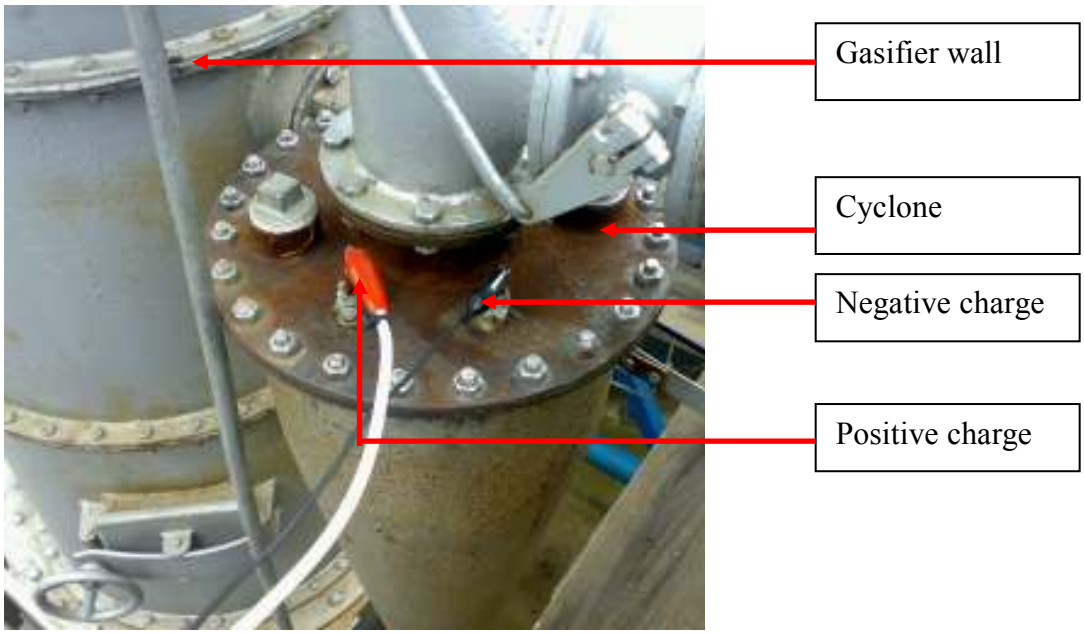

Figure 3.10: Cyclone connected to the gasifier and gas scrubber supplied with 2kV DC.

3.5. MELANI COMMUNITY ASSESMENT

The Melani community background assessment was undertaken through completion of a questionnaire. The respondents of the questionnaire were the community leadership because they have a database of information regarding the community status. This information includes the population demographics and the employment status of people in the community. However the researcher overlooked people employed by the school and the clinic at the village because they constituted an insignificant number, 2 teachers and 2 nurses. The questionnaire is presented as appendix B.

The results obtained from the community chairperson and his colleagues were endorsed to be a true reflection of the community by the community members at a meeting held in the community hall. A community needs assessment was not conducted but the community members present at a meeting that endorsed the information obtained from the community leaders were asked to discuss their needs after which they identified and discussed the needs. Community members also discussed the possible business ventures that could be associated with the gasification project and came to a conclusion that they needed a bakery, chicken broiler and a grain mill.

3.6. PROJECT FINANCIAL PROJECTIONS

The project financial projections were undertaken through a Microsoft office excel spreadsheet with a number of assumptions made as presented in the results section of the thesis.

CHAPTER 4

RESULTS AND DISCUSSION

4.1 SAMPLE DATA MEASURED USING THE GAS AND TEMPERATURE MONITORING SYSTEM BEFORE ITS DEPLOYMENT.

Table 4.1 shows the data measured during the testing of the hydrogen sensor using pure hydrogen gas. This is also used for calibration of data recorded by this sensor. The accuracy of the sensor is clear on the figure.

Table 4.1: Hydrogen data measured during testing of the hydrogen sensor.

Test concentration (%)	Expected output (VDC)	Measured output (VDC)	Standard Deviation (SD)	% difference
0	0	0	0	0
0.583	0.029	0.030	0.000707	-2.916
0.983	0.049	0.050	0.000707	-1.729
2.002	0.100	0.100	0	0.099
3.291	0.165	0.170	0.003536	-3.312
4.802	0.240	0.250	0.007071	-4.12
9.874	0.494	0.520	0.018385	-5.327
18.587	0.929	0.930	0.000707	-0.069
39.014	1.951	1.960	0.006364	-0.476
96.809	4.840	4.850	0.007071	-0.197

There is no much difference between the measured and expected values as can be clearly observed from table 4.1. This confirms the reliability of the data obtained using the hydrogen sensor during the execution of the other experiments.

Figure 4.1 show the comparison of results obtained using the GTPS, Gas chromatograph, simulation and an average from various literature studies. The 180Nm^3/h gasifier was run for one hour thirty minutes three times with the GTPS connected to a gas outlet pipe after the filters. The gas temperature at this point was 25°C. Table 4.2 presents the gasifier operating conditions during experimentation.

Table 4.2: Gasifier operating conditions.

Parameter	**Value/Quantity**
Equivalence ratio	0.26
Pressure	100kPa
Temperature (maximum)	1300°C
Air temperature (before pre-heating)	25°C
Fuel moisture content	10-17%
Load	25%

Eucalyptus candulensis wood was used as fuel for the gasifier. A barometer was used to measure the pressure inside the gasifier. The barometer used is an aluminum analog meter that operates at 50-500kPa. It operating temperature range is 0-1500°C. It accuracy is ±0.60kPa at +60°C. It has a 0-10V analog output. The results were compared to results obtained by the Council for Scientific and Industrial Research (CSIR) under slightly different conditions; they used a Gas Chromatograph for gas analysis.

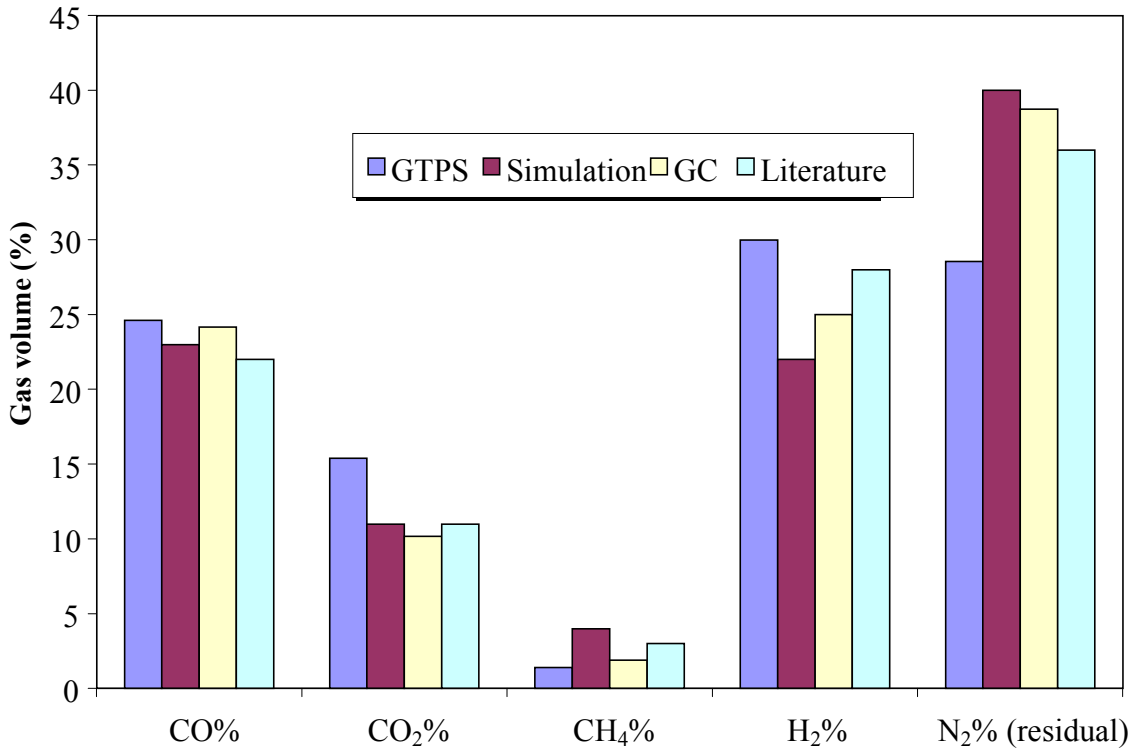

Figure 4.1: Comparison of results obtained using the GTPS and other methods.

The results obtained using the GTPS, gas chromatograph (GC), computer simulations and literature study do not vary significantly except for the nitrogen and hydrogen content that differs significantly between the results obtained by GTMS and those obtained by GC, simulation and literature study; with a percentage difference of 26% between the nitrogen content recorded by GC and that calculated from the GTMS. The variation in the results presented in this figure is due to of gasifier operating conditions such as temperature, and fuel properties such as moisture content.

Although the GC and GTPS results were obtained using *Eucalyptus candulensis*, the data was collected at different gasifier load. The fuel moisture content was also slightly different with average moisture content of 17% for tests conducted using the GTPS and 14% for tests conducted using the GC. This moisture variation gave rise to gas with

higher hydrogen content (water gas shift reaction) and lower nitrogen content for the GTPS tests and lower hydrogen content and higher nitrogen content for the GC tests. The nitrogen content was determined by difference for the tests conducted using the GTPS.

Figure 4.2 shows the gas profiles obtained using the GTPS before it was deployed at the gasifier system. Interesting to note is the NDIR sensors response to the changes in gas composition. The main aim of the experiment was to establish the GTPS's response. The GTPS was connected to a gas outlet pipe at the 180Nm^3/h gasifier system.

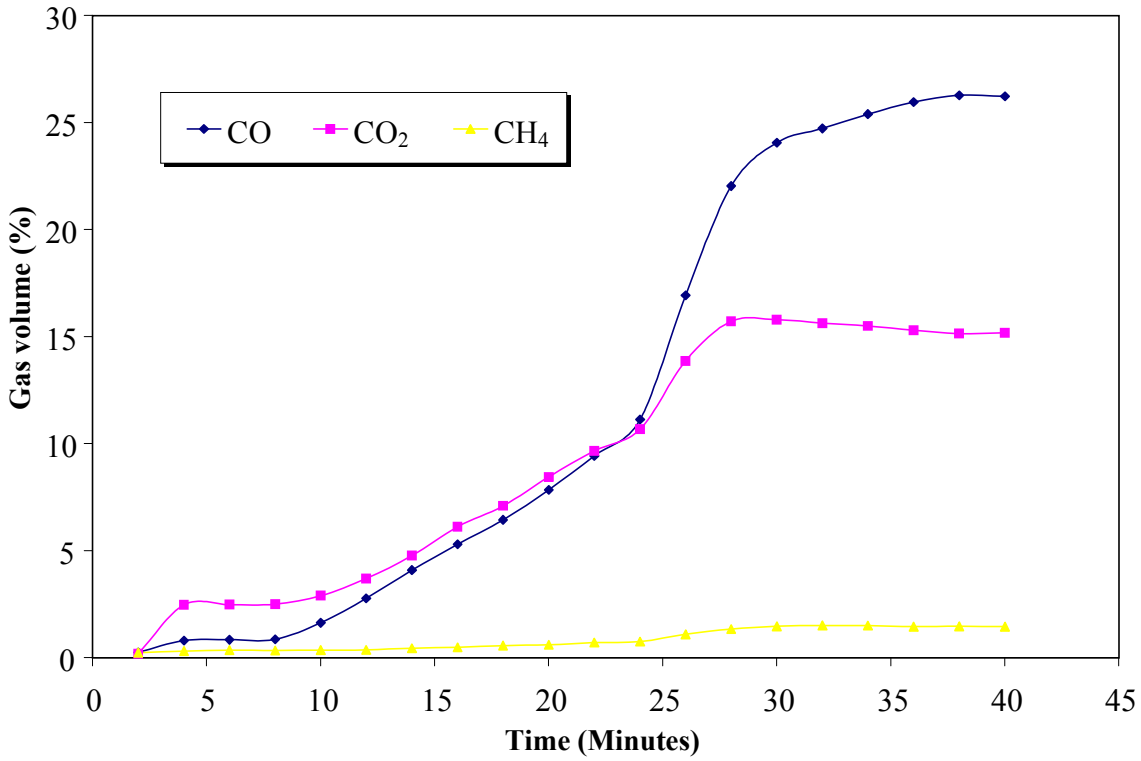

Figure 4.2: Gas profiles obtained using the Gas and Temperature Profiling System.

The gas was ignited at the raw gas flare off pipe between 25 and 30 minutes and it ignited. From that time onwards the GTPS recorded an average of 25% carbon monoxide, 15% carbon dioxide and 2% methane. The syngas gas with these average gas

compositions and 18-30% hydrogen has an average heating value of 6MJ/kg and could easily ignite. Attempts to ignite the gas before 25 minutes were unsuccessful, implying that the gas was not yet ready for ignition; the gas volume had not yet reached the Lower Flammable Limit (LFL), which is obtained using Le Chatelier's mixing rule for combustible volume fractions x_i as follows:

$$LFL_{Mix} = \frac{1}{\sum_{i=1}^{n} \frac{X_i}{LFL_i}} \tag{4.1}$$

Where

LFL_{Mix} = Lower flammable limit of the gas mixture.
X_i = mole fraction of component I on a combustible basis.
LFL_i = Lower flammable limit of the particular gas species *i*.
n = number of combustible species.

4.1.1. Comparison of the cost of the GTMS and other instruments

Table 4.3 is a comparison of the average cost of selected instruments used in gas analysis at biomass gasifiers and the developed GTPS. The cost is the average of the quotations from five different equipment suppliers. It was necessary to compare the cost of the GTMS with the cost of other equipments used to conduct gas analysis in the field in order to establish whether the GTMS is low-cost or not.

Table 4.3. Average cost of selected instruments used in gas analysis.

Instrument	**Average price (USD)**
Fourier Transform Infrared Spectroscopy	31,662
Heliu-Neon Lasers	31,134
Gas Chromatography-Mass Spectroscopy	65,962
InSb cascade Lasers	1,055,404
Quantum cascade Lasers	39,577
Gas and Temperature Profiling System	*6,596*

It is clear from table 4.3, the GTMS costs less than all the other displayed instruments. Although the other instruments have wider applications, the envisaged users of the GTMS do not need such applications, they only need gas and temperature measurements.

4.2. IMPACT OF CONDENSATES ON EFFICIENCY

Table 4.4 presents the ultimate and proximate analysis of the eucalyptus wood used to conduct the study on the impact of condensates production on gasifier efficiency. The proximate and ultimate analysis procedure is presented in chapter 3 section 3.1.2. It is necessary to conduct a proximate and ultimate analysis of biomass before conducting an experiment. Fuel properties govern the gasifier design, operation and efficiency as indicated in chapter two. The carbon releases heat during combustion/gasification. The volatile matter content gives an idea of the degradation rate of the biomass material. The high volatile matter content also meant that the fuel would be easy to ignite. The ash and moisture content affect the energy content of biomass materials and that has an impact on the input energy from the particular biomass material.

The results presented in table 4.4 were obtained from an average from three samples analyzed according to the procedure in section 3.1.2 of chapter 3.

Table 4.4: Ultimate and proximate analysis of eucalyptus wood used for the study.

Properties/elements	Sample 1	Sample 2	Sample 3	SD	Composition (%)
Volatiles	81.2	80.9	81.4	0.251661	**81**
Carbon	48.4	49.6	49.3	0.6245	**49**
Oxygen	44.5	44.7	43	0.929157	**44**
Fixed carbon	17.6	17.8	17.7	0.1	**18**
Hydrogen	6	6.2	6.4	0.2	**6**
Ash	0.71	0.8	0.78	0.047258	**0.76**
Nitrogen	0.29	0.3	0.34	0.026458	**0.3**
Sulphur	0.01	0.014	0.012	0.002	**0.01**
LHV (MJ/kg)	18.1	17.2	17.3	0.493288	**17.5**

Table 4.5 shows the dry residue content at various time intervals. The procedure followed when determining the dry residue content of the condensates is presented in section 3.13. It was necessary to quantify the dry residue content as this is the portion of the condensates with the chemical energy from the original fuel. This is the energy that would no longer be available for conversion to the final gases resulting in low process efficiency (cold gas efficiency). The results presented in the table represent an average from three samples per time interval.

Table 4.5: Water and dry residue (hydrocarbons) content in condensates at various time intervals.

Time interval (Minutes)	Water content (%)	Dry residue (Hydrocarbons) content (%)	Dry residue (Hydrocarbons/tars) (g)
25	67.0	33.0	7.5
50	70.3	29.7	1.2
75	74.4	25.6	1.53
100	70.5	29.5	1.67
125	74.1	25.9	0.75

On average 70% of the condensates consist of water with the remaining 30% being hydrocarbons with an average lower heating value of 13MJ/kg. There is a drastic decrease in the quantity (g) of tar/dry residue with time for the first 50 minutes; this is due to the decrease in the quantity of condensates produced as most of the water in wood fuel is driven off within the first 25 minutes of operation.

The percentage of hydrocarbons is also higher within the first 25 minutes. This could be due to the production of larger quantities of tars at the beginning when the fuel still had higher moisture content. The tar is produced during the pyrolysis/carbonization stage of gasification as indicated in chapter 1(figure 1.1). A detailed analysis of the tar was not conducted as part of this research as this is a well known aspect in gasification and it would have diverted the attention of the project from its core investigation, which was the establishment of the energy content of the condensates and its impact on gasifier efficiency irrespective of what the condensates are made of.

Figure 4.3 shows the relationship between tar content and water content. The figure was generated from the data presented in table 4.5. The relationship presented in the figure was not too clear in table 4.5 hence the need for figure 4.3.

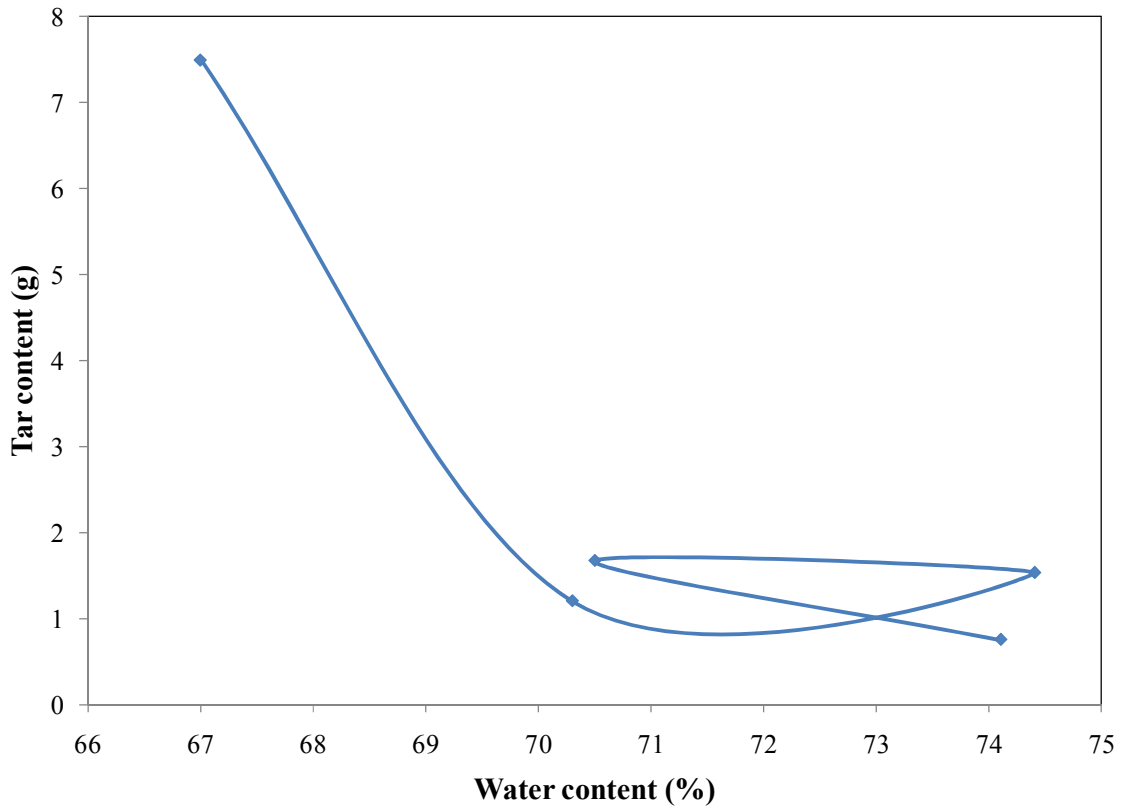

Figure 4. 3. The relationship between tar content and water content.

It is clear from figure 4.3 that the relationship between moisture content and the production of hydrocarbons is not proportional. This could imply that there is no correlation between production of condensates and hydrocarbons production, and by implication, gasifier conversion efficiency or fuel moisture content.

The hydrocarbons were found to be produced at very small quantities and could therefore not have a greater impact on gasifier conversion efficiency. This is further covered during the analysis of the mass and energy balance of the gasifier system presented in table 4.6.

The higher production rate of condensates was supposed to increase the surface area for tar condensation as the tar condenses and dissolves into the water that forms the major

part of condensates. Without this large surface area, the tar would end up in the combustion zone and get converted into useful gases as explained later in this chapter.

Figure 4.4 shows the heating value of syngas and the heating value of dried residue from condensates (referred to in the figure as condensates heating value). The data on the gas composition was necessary in order to calculate the gas heating value, which allows for the determination of the gasifier efficiency. The procedure followed in determining the heating value is presented in chapter 3 sections 3.3.2.6 and 3.3.3. The procedure followed in determining the gas heating value is presented in section 3.3.1.

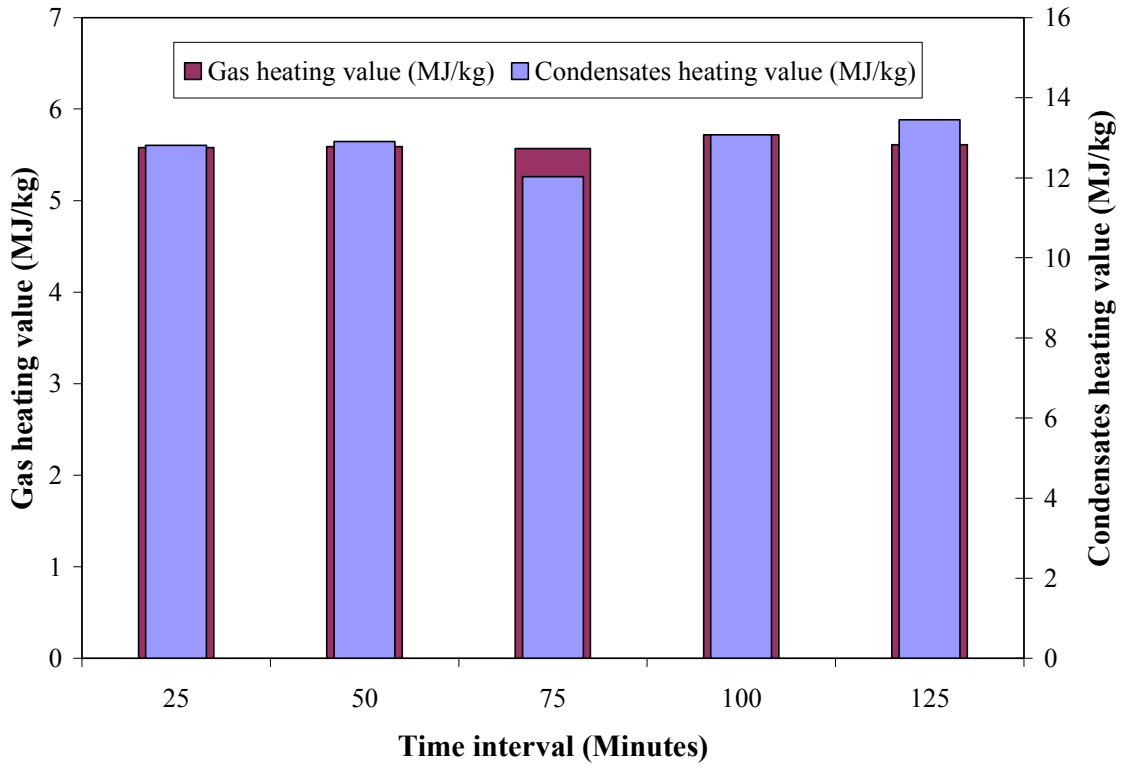

Figure 4.4: The gas and condensates heating value at various time intervals.

The dry condensates residue consists of condensable hydrocarbons (tars), with some energy embedded (approximately 13MJ/kg), and are therefore drained with this energy. The condensates get trapped and drained out through the use of the condensates trap

shown in figure 3.6 (a and b). These condensates are collected in the condensates tank outside the gasifier (figure 3.7) and later drained for disposal. If the hydrocarbons in condensates are to be converted to syngas, this could add to gas heating value and by implication, to the gasifier efficiency. The main problem would be how to convert the hydrocarbons since they are dissolved in water. For the purpose of this research the water was driven off from condensates leaving the hydrocarbons behind by using a bench-top manifold freeze dryer. The use of a freeze dryer for dying condensates could be an option at industrial biomass gasifiers, however the cost associated with this exercise was not quantified as this research was focused on the impact of condensates on the gasifier efficiency. The heat from the gasifier could also be used to drive off the water from condensates before they are finally returned to the gasifier for final conversion.

When the condensates are stored for extended period some hydrocarbons settle at the bottom of the storage tank/drum, but not all of the hydrocarbons have that tendency and this takes one to two weeks to happen. At this stage the water could be drained from the top leaving the hydrocarbons at the bottom for further drying in the sun and returning to the gasifier. However both this and the latter processes are not desirable solutions because they do not stop the production of condensates.

The gas heating value remained fairly constant for the test period, but the condensates heating value fluctuated between 50-75 minutes and 75-125 minutes as shown in figure 4.5. The fluctuation is however not significant as the percentage difference between the highest and the lowest condensate heating value was found to be 4.16%, which is far much less than the critical value of 10%.

Figure 4.5 presents the gasifier conversion efficiency over the entire test period, figure 4.6 presents the comparison between condensates quantity and gasifier efficiency. The developed gas and temperature measuring system presented in chapter 3 was used to measure the volume and composition of the gas, equation 3.5 was used to calculate the gas lower heating value and equation 2.5 was used to calculate the gasifier conversion

efficiency. It was necessary to calculate the gasifier conversion efficiency for the entire test period in order to establish major deviations from the average efficiency at various time intervals where the efficiency is compared to the production of condensates.

Figure 4.5 shows the graph generated from the average gasifier efficiency after three test runs that lasted between 125 to 130 minutes each; measurements were taken 20 minutes from the time of ignition. The gasifier reaches maximum efficiency within 15 minutes. The turn down ratio for this gasifier is 25% and it has a capacity to run for 3 hours consuming 65kg/h of fuel, which translates to 180kg of fuel in 3 hours. At the end of 125 minutes the gasifier start to approach its turn down ratio and data collected afterwards become unreliable because the gasifier at that stage starts to produce tar. This is common knowledge in the field f gasification. This was therefore avoided hence the system could only be operated for a maximum period of 130 minutes per test run. The gasifier is also a batch type, so continuous feeding of the system was not possible.

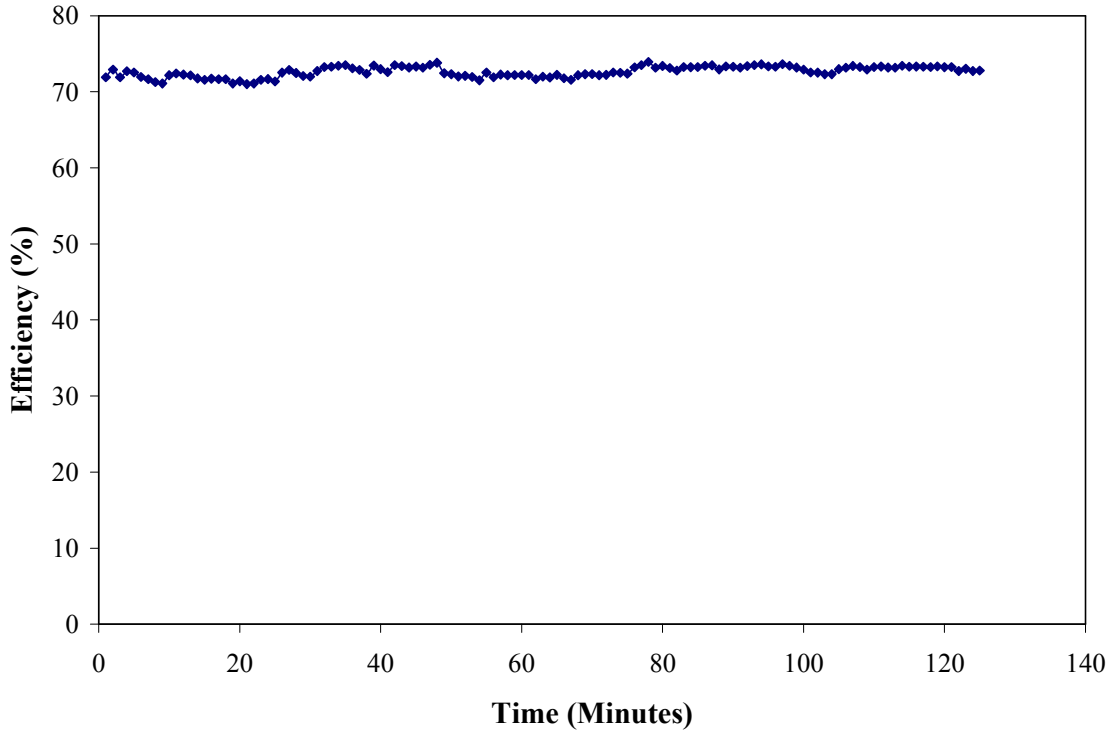

Figure 4.5: The gasifier conversion efficiency over the entire test period (15% fuel moisture content).

It is evident from figure 4.5 that the gasifier achieved an average cold gas efficiency of 73% over the test period of 125 minutes. Figure 4.6 presents the correlation between gasifier efficiency and the condensates quantity as well as the breakdown of the efficiency into 25 minutes time intervals. This allows for the correlation between efficiency and condensates quantity and energy content because the condensates were drained and analyzed at 25 minutes time interval. The quantity of condensates was measured using a graduated measuring cylinder. The details of the procedure followed in acquiring the data presented in this figure are available in chapter 3.

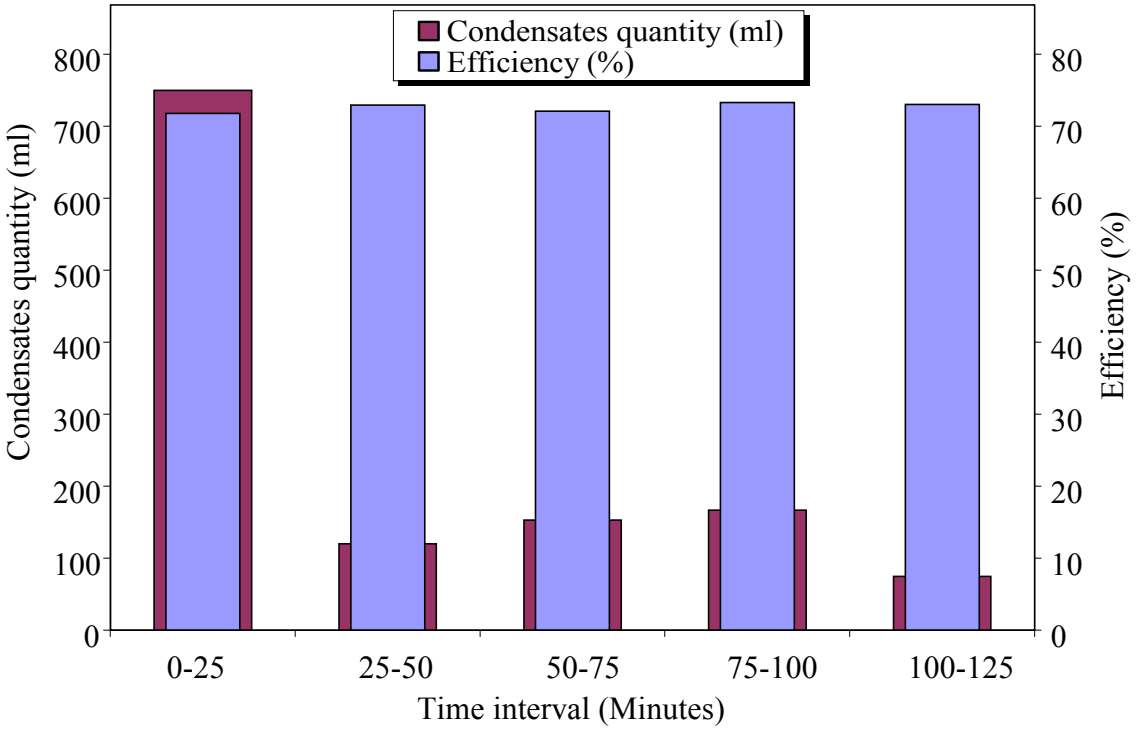

Figure 4.6: The condensate quantity and gasifier conversion efficiency at various time intervals.

On average, higher gasifier efficiencies were observed at 75-100 minutes (73.31%) time interval followed by 100-125 minutes (73.04%) and 25-50 minutes (72.96%) time interval respectively. The percentage difference in the conversion efficiency during the latter time intervals was found to be 0.47%, this was due to the 2.44% difference in gas heating value, which is not significant because the percentage difference is less than the critical 10%; and does not deviate much from the average conversion efficiency as shown in figure 4.5. The quantity of condensates was observed to be lowest (75ml) at 100-125 minutes time interval. This suggests that by that time most of the water in fuel entering the combustion zone had already been driven off.

The quantity of condensates was observed to increase from 120ml at 25-50 minutes time interval to 153ml and 167ml at 50-75 minutes and 75-100 minutes time intervals

respectively. The gasifier conversion efficiency at these time intervals varied between 72.96%, 72.11% and 73.31%. The percentage difference in conversion efficiency was found to be 1.63%, which is insignificant. While the percentage difference in condensate production between 0 and 125 minutes was 90%. This implies that the efficiency of the gasifier is not affected by the production of condensates.

The increase in condensates quantity from 120ml to 167ml between 25 and 100 minutes of operation was attributed to the fact that while most of the water driven off from fuel at the carbonization zone condenses on the gasifier wall and gets collected through the condensate trap, some of these condense on the surface of the fuel in the fuel hopper and later get driven off in the carbonization zone again. This was confirmed when eleven samples of fuel whose moisture contents were known were labeled 1-11 and placed randomly inside the fuel hopper before the gasifier was ignited; the samples were later removed within 30 minutes of gasifier operation and their moisture contents were measured through a moisture meter. The samples were removed within 30 minutes of operation because beyond that time they would have reached the carbonization zone making it difficult to identify and remove them for measurements. Figure 4.7 presents the moisture content of fuel samples taken before and after the 30 minutes of gasifier operation.

The condensation of moisture on the surface of the fuel in the fuel hopper could happen if the gasifier reaches the dew point temperature in the fuel hopper. The dew point temperature is reached when gas from the oxidation zone is cooled from about 1300°C to less than 100°C in the fuel hopper. The water vapour condenses due to the cooling. This is a phenomenon that rarely happens during gasifier operation, but happens mostly after gasifier close down leading to higher moisture content in fuel left in the hopper. This was observed several times where the moisture content of fuel in the fuel hopper was found to have increased from approximately 9-14% to approximately 13-30% over night. In this case the data presented in figure 4.7 was measured during gasifier operation. This is a phenomenon that needs further research.

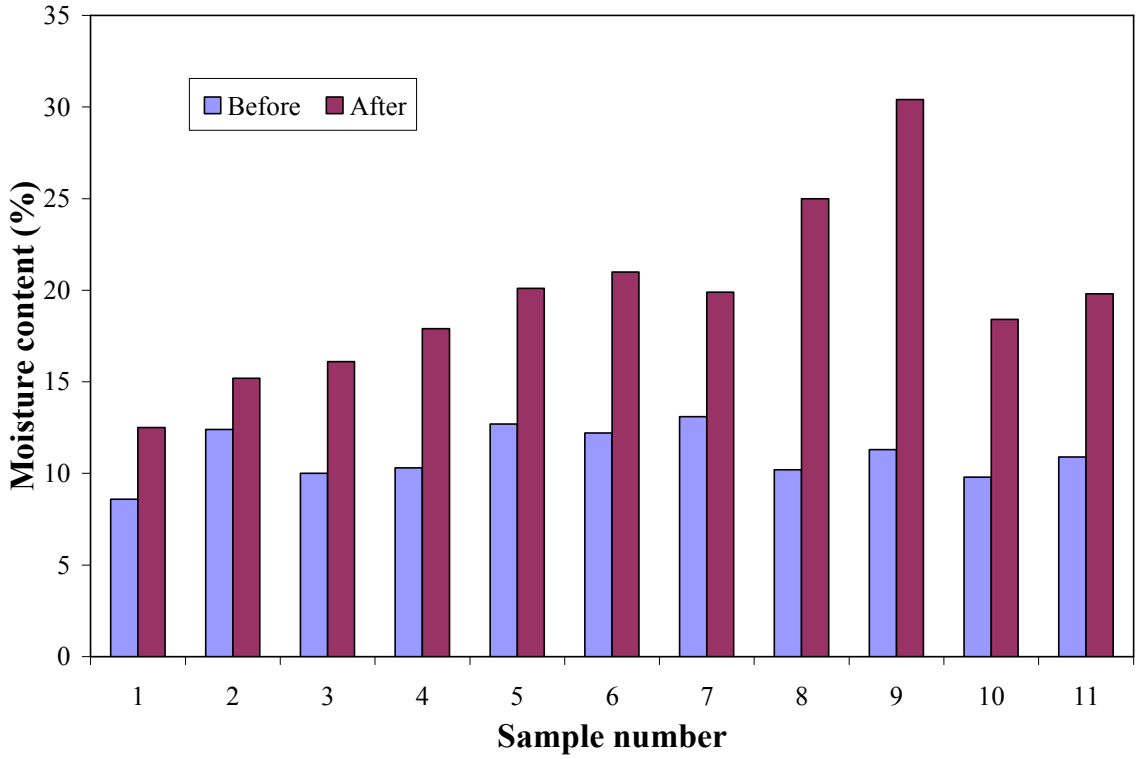

Figure 4.7: The moisture content of fuel before and after the 30 minutes of operation.

The increase in moisture content after the test run is evident from figure 4.7. It is also evident from figure 4.6 that there was a significant increase in quantity of condensates at 0-25 minutes, which is when most of the fuel was dried. An increase in condensates quantity was observed between 50 and 100 minutes, which was due to the release of moisture that condensed on the fuel surface in the hopper when it was driven off from the fuel in the carbonization zone. A decrease in condensates quantity was also observed between 100-125 minutes, which was the time when the fuel hopper fuel volume was lower and most of the fuel dried in the carbonization zone.

4.1.1. Mass and energy balance of the gasifier

Table 4.6 presents the mass and energy balance of the gasifier. The procedure followed to obtain data presented in table 4.6 is presented in section 3.3.4 of chapter 3. The mass and energy balance of the gasifier gives an idea about the significance of the energy carried by condensates and other products and by-products of the gasification process, as well as the impact of the various energy distributions on gasifier efficiency.

Table 4.6: The mass and energy balance of the gasifier.

	Gross weight full (kg) (15% Moisture content)	Consumption (kg/h)	Lower heating value (MJ/kg)	Energy (MJ)	Quantity (kg/h)	Quantity (ml)	Max. output (Nm^3/h)	Heating value (MJ/Nm^3)	Thermal (kW_{th})
Fuel	240	60	17.5	2730.0	-	-			-
Gas	-	-	5.6	-	-	-	120.0	6.37	-
Charcoal	-	-	28.5	444.6	6.0	-	-	-	-
Cyclone fine carbon	-	-	11.2	1.2	$1.07x10^{-1}$	-	-	-	-
Operating condensates (wet)	-	-	-	-	-	253.0	-	-	-
Operating condensates (Dry)	-	-	12.8	$5.76x10^{-3}$	$4.50x10^{-4}$	-	-	-	-
Close down condensates (wet)	-	-	-	-	-	420.0	-	-	-
Close down condensates (Dry)	-	-	12.8	$8.09x10^{-1}$	$6.30x10^{-2}$	-	-	-	-
Thermal output	-	-	-	-	-	-	-	-	180.0

It is clear from table 4.7 that most of the energy that does not leave with the syngas goes to the charcoal. Unlike updraft gasifiers, downdraft gasifiers do not achieve high charcoal burnout and internal heat exchange that leads to low gas exit temperatures and high efficiencies [Quaak *et al*, 1999]. The resultant charcoal has higher energy per volume (28.5MJ/kg) than the fuel (17.5MJ/kg), however the quantity of charcoal is less than that of the original fuel therefore the quantity of energy in charcoal becomes less than the input energy from the original wood. The input energy from the original fuel is 2730MJ, while that of the charcoal is 444.6MJ. The energy in charcoal represents 16.37% of the input energy; the combined energy in charcoal, cyclone carbon and condensates is 16.44%, which implies an overall hot gas efficiency of 83%. This gasifier achieved an average cold gas efficiency of 72.8% considering the gas heating value of 6.37MJ/Nm^3, fuel consumption of 60kg/h and gas production of 120Nm^3/h. This translates to an average gas production of 2Nm^3/kg fuel.

The average energy lost with condensates is about 0.8MJ of the original 2730MJ energy input with eucalyptus wood with 12-15% moisture content. This implies that condensates carry 0.03% of the total energy input. The percentage difference between the gasifier efficiency and the energy carried by condensates is 99.9%. The cyclone fine carbon particles carry 0.043% of the total energy input.

The quantity of energy in fuel compartment condensates is insignificant as compared to the quantity of energy in charcoal, the original fuel and the gas. This energy do not have significant impact on the gasifier conversion efficiency, therefore the production of condensates do not have a direct impact on the gasifier conversion efficiency.

4.3. CYCLONE COLLECTION EFFICIENCY AND EFFECTIVENESS

Figure 4.8 shows the cyclone collection efficiency for ferrosilicon with less than 5 microns particle size, with and without the solenoid at 0kV DC. This was measured to establish whether the introduction of the solenoid had the intended impact on cyclone particle collection efficiency and effectiveness. The method employed in obtaining the data presented in figure 4.8 can be found in section 3.4.1 of chapter 3. The data was collected in triplicate with the average from the three experiments taken as the representative.

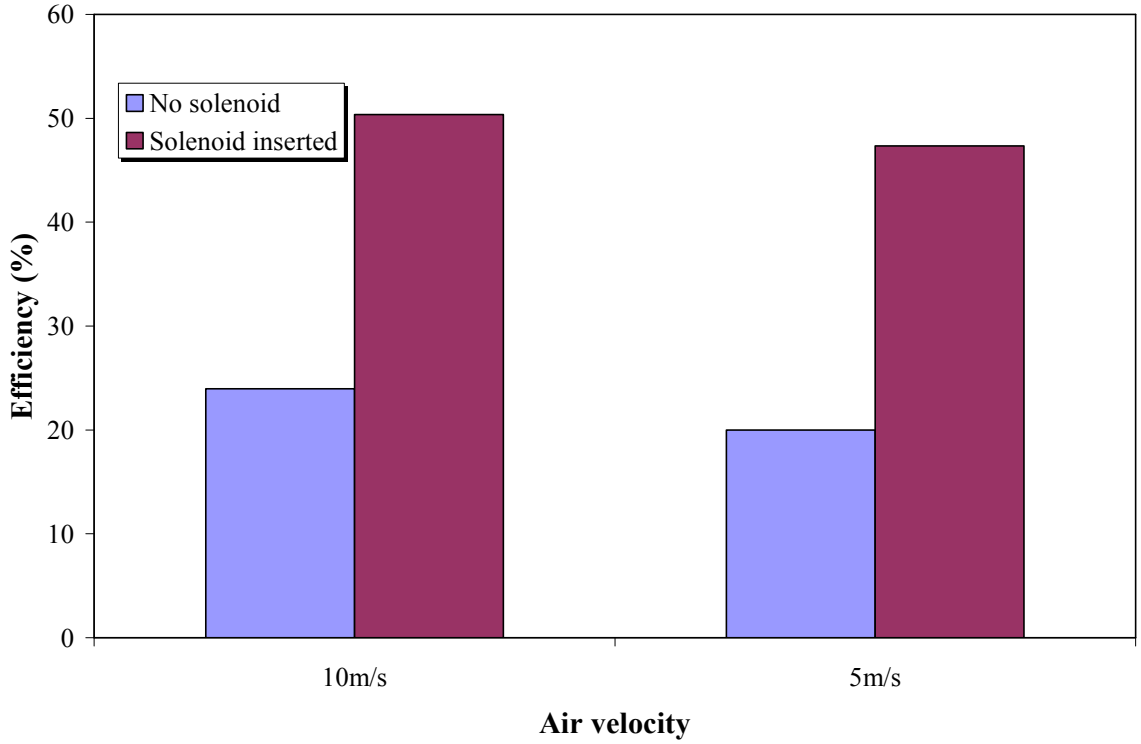

Figure 4.8: Cyclone collection efficiency for ferrosilicon of less than 5 microns particle size with and without the solenoid at 0kV DC.

Evident from figure 4.8 is the increased cyclone collection efficiency due to the introduction of the solenoid. The collection efficiency doubled with the introduction of the solenoid. This is because of the increased surface area due to introduction of the

solenoid. The increased surface area introduced an additional particle collection mechanism adding to the centrifugal force and inertia before the introduction of the electric field that augmented the inertia. It was suggested that when the particle laden gas enters the cyclone, most particles collide with the solenoid as the gas circulates around the vortex finder. These particles no longer get suspended in the gas; as a result they get collected at the bottom of the cyclone and form part of the underflow. Apart from the conventional centrifugal and inertia forces, the introduction of the solenoid and its charging added two particle collection mechanisms that proved extremely effective.

Figure 4.9 presents the cyclone collection efficiency for particles with less than 5 microns in size with the solenoid supplied with 1-3kV DC at 5m/s and 10m/s air velocity respectively. The aim of this data was to establish the impact of solenoid charging on particle collection efficiency. The experimental procedure followed to obtain the data presented in figure 4.9 can be found in section 3.4.1 of chapter 3. The data was collected in triplicate with the average from the three experiments taken as the representative.

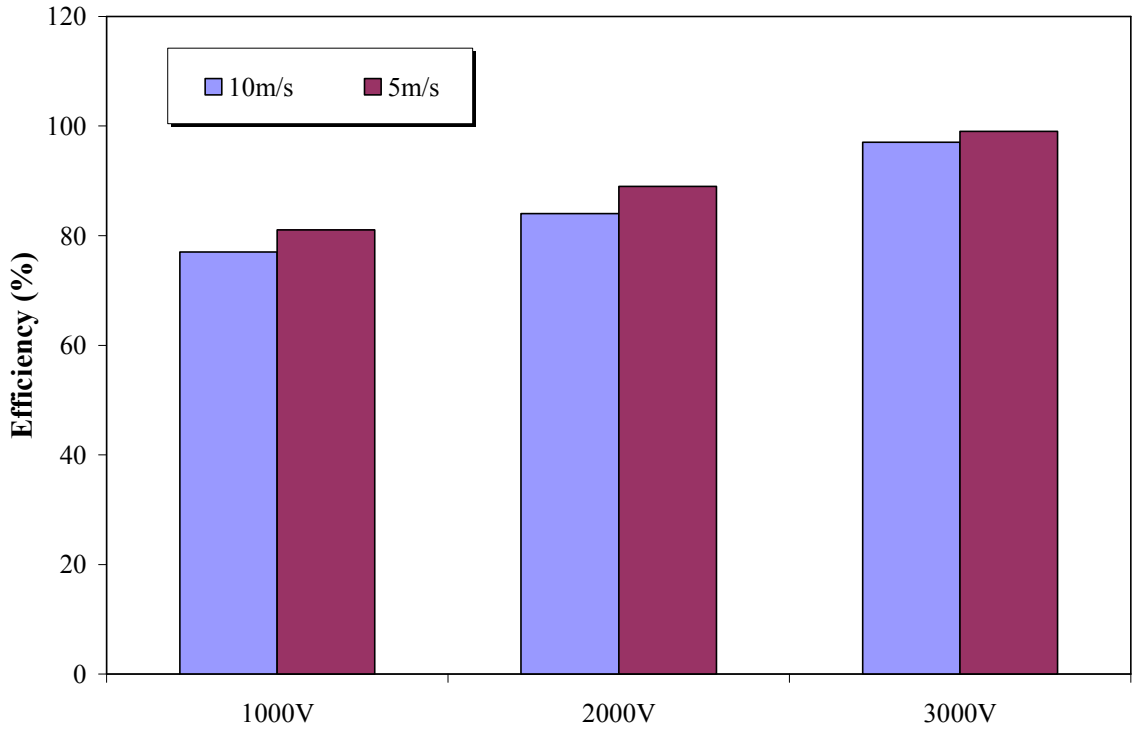

Figure 4.9: Cyclone collection efficiency for ferrosilicon of less than 5 microns particle size with solenoid charged at 1kV-3kV DC.

An increase in particle collection efficiency with an increase in DC voltage supplied is clear from figure 4.9. The collection efficiency is slightly higher at low air velocity. This is common for cyclones with external electric field, though this design has internal electric field instead. The highest particle collection efficiency was achieved at 3kV DC when the initial experiment was conducted with ferrosilicon powder with less than 5 microns particle size. However it was not possible to supply such high voltage when the cyclone was connected to the gasifier due to sparks caused by the gas flowing through. It was suspected that the sparks were caused by the ionization of gas. The ionization of the gas was not further investigated due to the fact that it falls outside the scope of this study. This research recommended that this ionization should be investigated in future.

It is suspected that the introduction and charging of the solenoid contributed to three particle collection mechanisms in addition to the centrifugal forces and inertia. The three mechanisms are the increased surface area, force of repulsion for charged particles and dielectrophoresis. This implies that any charged particle would be acted upon by about five forces in the same direction. The researcher was interested in improvement of the particle collection efficiency of the cyclone, with all other aspects recommended for further research, thus an in-depth analysis of the suspected forces was not undertaken.

Figure 4.10 shows the dust/carbon particle collection of cyclone fitted to the gasifier and operated for 150 minutes. The data presented in the figure was necessary to investigate the impact of the solenoid on the collection of fine carbon particles at the gasifier. The experimental procedure followed to obtain the data is presented in section 3.4 of chapter 3.

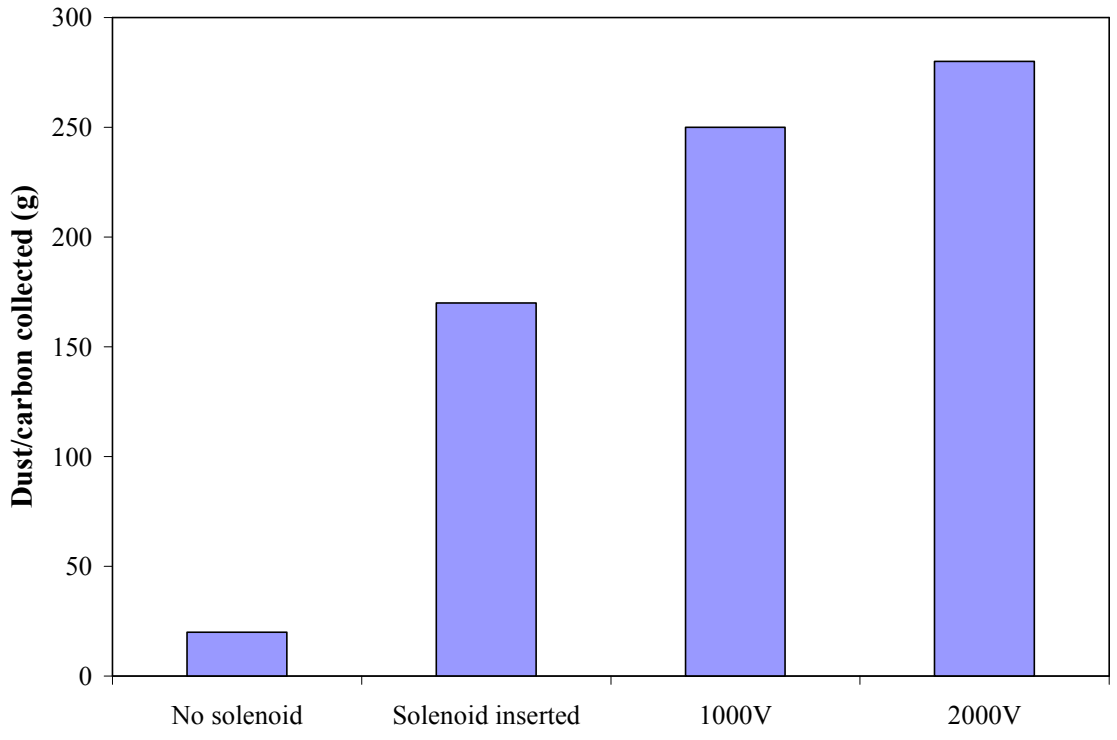

Figure 4.10: Dust/carbon particle collection of cyclone fitted to the gasifier operated for 150 minutes per each test run (Air velocity: 10m/s).

The high particle collection due to the introduction of the solenoid is in agreement with experimental investigations with ferrosilicon powder of less than 5 microns in size. The same applies to the high particle collection with the solenoid charged at 1kV DC and 2kV DC respectively. The collection of up to 250g of fine carbon particles with the solenoid supplied with 2kV DC suggests that the conventional cyclone could not collect most of the particles less than 5 microns in size as reported in a number of studies in chapter two. This also suggests that the introduction and charging of the solenoid proved effective in removal of particles less than 5 microns in size. Most of these particles were passing through to the gas scrubber and possibly the particle interference sawdust filters.

The introduction and charging of the solenoid in the conventional cyclone improved its effectiveness in particle collection efficiency.

4.4. MELANI VILLAGE COMMUNITY BACKGROUND

The Melani village community background was investigated to establish a baseline from which the project impact on the socio-economic status of the community could be assessed. The data was collected according to the procedure laid down in section 3.5 of chapter 3.

4.4.1. Age distribution and skills

Melani is a rural village located approximately 13 km North of Alice Town and the University of Fort Hare; it consists of approximately 500 households, housing approximately 2800 people. Table 4.7 shows the age distribution of the people at Melani village. The data presented in the table was necessary to establish the population demographics at the village. This data was obtained through the use of a questionnaire presented in appendix B.

Table 4.7: Community age distribution.

Age	Number of people
Under 10	65
Between10 and 20	700
Between 20 and 50	1200
Between 50 and 70	500
Over 70	110
Total	2800

It is clear from table 4.7, the majority of people at Melani village are between the age of 20 and 50 years. Generally one expects diverse skills from communities dominated by this age group, which is not the case with this community.

The community is characterized by the lack of skills; approximately 13% of the 1900 people at the age of 20 to 50 years possess skills of some sort out of the 2800 people living in the village. The skills are brick laying (0.8%), sewing (1%), welding (10%), house wiring (0.3%), carpentry (0.3%), and plumbing (0.5%). Approximately 87% of the working age (20-50 years) community members do not have any sort of skills or they are unemployable. Most of the skills amongst community members were acquired through firsthand experience rather than attending institutions of higher learning. Most of the skilled people are adults who acquired the skills when working as assistance to professionals in the various fields. The lack of skills could be attributed to the fact that Melani village is home to one of the historically disadvantaged rural communities. There is generally lack of skills and high unemployment rate in most previously disadvantaged rural communities in South Africa.

4.4.2. Employment status of the community

Figure 4.11 shows the employment status of the community. The majority of people in the community are unemployed (approximately 70% of the working age group). The major employer at the village is the sawmill operator who employs 10.5% of the 20-50 years old community members as time employees on full time basis and an additional 4% of them are employed as part time employees. However, part time laborers only work six months in a year. About 14% of the people in the working age group are self employed as carpenters, welders, subsistence farmers etc. The employment status of people in this community could be attributed to the high percentage of unskilled people as discussed earlier. Most households rely on government grants such as old age pension funds, child support grants etc.

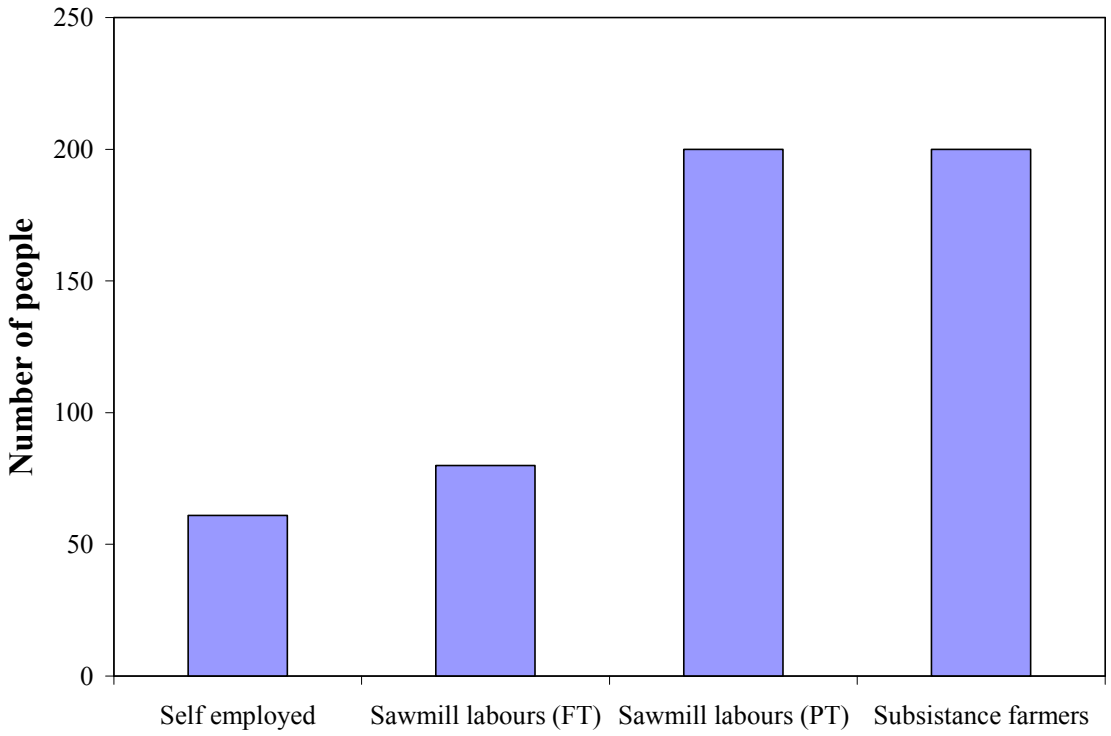

Figure 4.11: Employment status of the community.

There is a lack of employment opportunities and job insecurity at the village. This is what prompted the establishment of the biomass gasification project. In lieu of all these the System Johansson Biomass Gasifier was identified as a solution to the economic crisis at Melani village.

4.4.3. Community needs

As discussed earlier in this chapter there is lack of skills in the community. The skilled people do not have formal training in their respective areas. The community feels that they need formal training mostly for skills such as computer operation, sewing, welding, farming, business management, electrical engineering etc. The lack of skills amongst community members led to high unemployment rate. The community needs employment opportunities. More than 70% of the adults are unemployed.
Most community members who are willing to venture into small businesses that could empower them economically, lack proper infrastructure and funding. Some of them are involved in subsistence farming, they produce excess maize that they could grind and sell but they do not have funding and infrastructure. Therefore infrastructure development and funding for such type of projects are required.

The provision of low cost electricity for community economic empowerment could improve the livelihoods of people as community small businesses could operate at a much higher profit. The establishment of community small businesses supported by the electricity from the gasifier would result in job creation.

4.5. ANALYSIS OF PINE WOOD WASTE FROM SAW MILL

Before choosing the gasifier, it is important to ensure that the fuel meet the requirements of the gasifier. Table 4.8 presents the proximate and ultimate analysis of the biomass waste generated from sawmill operation at Melani village. The moisture content was found to be within the required limit of 20%. Very high moisture content evaporates and

condenses against the walls of the gasifier producing condensates; although the gasifier has an internal condensate trap, excess moisture could lower the temperature inside the heath affecting thermochemical reactions leading to poor gas quality [Mamphweli *et al*, 2007]. However this has a neglible impact on the overall gasifier conversion efficiency. The heating value of the pine wood was determined on a moisture free basis after drying the wood at 120°C for 24 hours.

Table 4.8: Proximate and ultimate analysis of biomass.

Properties	**Sample 1**	**Sample 2**	**Sample 3**	**SD**	**Composition**
Moisture content	15.2	14.7	16.7	1.04	15.5
Ash content	6.1	6.3	6.4	0.15	6.0
Volatile matter	69	72	70	1.52	70.0
Fixed carbon	8.7	8.3	8.6	0.20	8.5
Carbon	48	51	53	2.51	50.6
SiO_2	12.5	12.9	13	0.26	12.8
Al	9.8	9.7	10.3	0.32	9.9
K	1.6	2.3	1.8	0.36	1.9
Ca	2	1.5	1.9	0.26	1.8
Mg	0.29	0.3	0.34	0.02	0.3
SO_4	0.25	0.19	0.18	0.0	0.2
PO_4	0.1	0.1	0.1	$1.7x10^{-17}$	0.1
LHV (MJ/kg)	17	19.2	18.1	1.1	18

The amount of chemical elements in the fuel influences the ash content of the fuel. The slagging behaviour of ash depends to a large extent on the ash melting temperature, which is influenced by the presence of trace elements giving rise to the formation of low melting point eutectic mixtures [Gasification fuels, 2005]. The oxidation temperature is often above the melting point of the biomass ash, leading to clinkering/slagging problems in the heath and subsequent feed blockages. Clinker is a problem for ash contents above

5%, especially if the ash is high in alkali oxides and salts which produces eutectic mixtures with low melting points [Mckendry, 2002].

Elements including silicates, potassium, sulfur, phosphorus, sodium, chlorine, calcium, iron and magnesium are involved in reactions leading to ash fouling and slagging [Jenkins *et al*, 1998]. Sulfur in essentially all its forms, quantitatively oxidizes during combustion, some of it reacts with alkali materials to form sulfates. Alkali sulfates are unstable at typical combustion temperatures of 900°C. These alkali sulfates can promote agglomeration. Potassium content is important to indicate potential ash melting or ash deposition through vaporization. Potassium is transformed during combustion and combines with other elements such as chlorine, sulphur, silica. Potassium volatizes and reacts readily during combustion [Miles *et al*, 2007]. The alkali elements also volatizes at temperature of 575°C and 750°C [Jenkins *et al*, 1998]. The term alkali is used to describe the sum of potassium and sodium compounds generally expressed as oxides K_2O and Na_2O. The alkali earths, MgO and CaO, are also important in slagging and deposit formation. Their very high fusion temperatures tend to inhibit the eutectic effect of alkalis [Miles *et al*, 2007]. Potassium, as oxides form low melting compounds with silicates [Jenkins *et al*, 1998 and Miles *et al*, 2007].

Ashes can cause a variety of problems particularly in up or downdraught gasifiers. Slagging or clinker formation in the reactor, caused by melting or agglomeration of ashes can lead to excessive tar formation and/or complete blocking of the reactor. A worst case is the possibility of air channeling which can lead to the risk of explosion, especially in updraft gasifiers. The possibility of the occurrence of slagging depends on the ash content of the fuel, the melting characteristics of the fuel and the temperature pattern in the gasifier. In general no slagging occurs with fuels having ash contents of 5-6%. Severe slagging can be expected for fuels having ash contents between 6% and 12% [Gasification fuels, 2005, Tripod, 2005, Rajvanshi, 1998 and Werther *et al*, 2000].

Up and downdraft gasifiers are able to operate with slagging fuels if specially modified, that is continuously moving grates and/or external pyrolysis gas combustion [Gasification fuels, 2005]. The SJBG consists of a downdraught gasifier that is equipped with an automatic variable speed ash grate activator that continuously removes the ash from the reactor.

The heating value of fuel decreases with an increase in ash content in biomass materials [Cheng and Azevado, 2005]. For example, wood with less than 1% ash typically has heating values near 20 MJ/kg. Each 1% increase in ash translates roughly into a decrease of 0.2 MJ/kg because the ash does not contribute substantially to the overall heat released by combustion [Jenkins *et al*, 1998]. The 6% ash in the biomass waste used in this study implies a decrease in higher heating value by 1.2%, resulting in the higher heating value of 17.8 MJ/kg from the original 18%.

Fuel with high volatile matter content produces more tar, causing problems to internal combustion engines. Volatile matter in the fuel determines the design of gasifier for removal of tar. Compared to other biomass materials (crop residue: 63-80%, Wood: 72-78%, Peat: 70%, Coal: up to 40%), charcoal contains the least percentage of volatile matter (3-30%) [Tripod, 2005]. The tar free Johansson biomass gasifier does not have many problems with tar formation as most of it is cracked. The 70% volatile matter in the wood is therefore of least concern to the operation of the SJBG.

4.6. FINANCIAL PREFEASIBILITY

The financial prefeasibility of the project was undertaken after establishment of the socio-economic status of the community and the fuel availability and suitability for the gasifier. Table 4.9 to 4.13 presents the financial prefeasibility. All calculations were made using the South African rand. The financial prefeasibility was undertaken with an assumption that the electricity from the gasifier would be sold back to the sawmill operators at a price less than they currently pay, this was because the sawmill operators were meant to

provide free fuel for the project. Part of the electricity will be sold to community projects at the same price as for the sawmill operators; this was meant to stimulate community economic development initiatives and to sustain the biomass gasification project. Based on the latter assumptions an electricity price of R0.29c/kWh with an annual inflation rate of 15% was used to undertake the financial modeling. The R0.29c/kWh was used because it was less than the Eskom tariff and the gasifier is supposed to provide the community with low-cost electricity. The Renewable Energy Feed in Tariff (REFIT) could not be used because the gasifier will not feed the electricity to the national utility grid through the REFIT program but it will rather feed the electricity directly to the community businesses.

A return on investment of eleven years was found to be possible using a simple payback period calculation based on the first year income after tax deduction. A project lifespan of about 20 years has been projected, which leaves a profit of about 9 years for the project.

It was also assumed that the project will sell carbon credits through the Clean Development Mechanism. A tariff of R0.12c/kW was estimated for the carbon credit market although this is expected to be much higher than the projected R0.12c/kW.

The tables 4.9-4.13 are meant to indicate how the return on Investment period was obtained, that is why there is no further discussion about the data presented in the table except for the latter discussion. In the absence of these tables it is difficult to establish how the researcher arrived at the return on investment of eleven years as previously stated.

Table 4.9: Detailed monthly income statement for year 1

	Apr-09	May-09	Jun-09	Jul-09	Aug-09	Sep-09	Oct-09	Nov-09	Dec-09	Jan-10	Feb-10	Mar-10	Total	Notes
kWh	59,400	59,400	59,400	59,400	59,400	59,400	59,400	59,400	59,400	59,400	59,400	59,400	712,800	Note 1
Kilowatts	113	113	113	113	113	113	113	113	113	113	113	113	1,350	Note 1
Sales Revenue	17,226	17,226	17,226	17,226	17,226	17,226	17,226	17,226	17,226	17,226	17,226	17,226	206,712	Note 1
Monthly Fuel usage (tons)	118.8	118.8	118.8	118.8	118.8	118.8	118.8	118.8	118.8	118.8	118.8	118.8	1,426	Note 2
Fuel Costs	-	-	-	-	-	-	-	-	-	-	-	-	-	Note 2
Operators	(16,000)	(16,000)	(16,000)	(16,000)	(16,000)	(16,000)	(16,000)	(16,000)	(16,000)	(16,000)	(16,000)	(16,000)	(192,000)	Note 3
Rent	-	-	-	-	-	-	-	-	-	-	-	-	-	Note 4
Cost of Sales	(16,000)	(16,000)	(16,000)	(16,000)	(16,000)	(16,000)	(16,000)	(16,000)	(16,000)	(16,000)	(16,000)	(16,000)	(192,000)	
Gross Profit	1,226	1,226	1,226	1,226	1,226	1,226	1,226	1,226	1,226	1,226	1,226	1,226	14,712	
Gross Profit %	7%	7%	7%	7%	7%	7%	7%	7%	7%	7%	7%	7%	7%	
Carbon Credits Income	14	14	14	14	14	14	14	14	14	14	14	14	162	Note 5
Depreciation Expense	(20,000)	(20,000)	(20,000)	(20,000)	(20,000)	(20,000)	(20,000)	(20,000)	(20,000)	(20,000)	(20,000)	(20,000)	(240,000)	
Project														

Management	(10,000)	(10,000)	(10,000)	(10,000)	(10,000)	(10,000)	(10,000)	(10,000)	(10,000)	(10,000)	(10,000)	(10,000)	(120,000)	
Audit & Accounting fees	(5,000)	(5,000)	(5,000)	(5,000)	(5,000)	(5,000)	(5,000)	(5,000)	(5,000)	(5,000)	(5,000)	(5,000)	(60,000)	
Maintenance & technical support	(5,000)	(5,000)	(5,000)	(5,000)	(5,000)	(5,000)	(5,000)	(5,000)	(5,000)	(5,000)	(5,000)	(5,000)	(60,000)	
Admin & Other	(5,000)	(5,000)	(5,000)	(5,000)	(5,000)	(5,000)	(5,000)	(5,000)	(5,000)	(5,000)	(5,000)	(5,000)	(60,000)	
Operating Costs	(44,987)	(44,987)	(44,987)	(44,987)	(44,987)	(44,987)	(44,987)	(44,987)	(44,987)	(44,987)	(44,987)	(44,987)	(539,838)	
Operating Profit	(43,761)	(43,761)	(43,761)	(43,761)	(43,761)	(43,761)	(43,761)	(43,761)	(43,761)	(43,761)	(43,761)	(43,761)	(525,126)	
Operating Profit %	-254%	-254%	-254%	-254%	-254%	-254%	-254%	-254%	-254%	-254%	-254%	-254%	-254%	
Finance Costs	0	0	0	0	0	0	0	0	0	0	0	0	0	Note 6
Net Profit	(43,761)	(43,761)	(43,761)	(43,761)	(43,761)	(43,761)	(43,761)	(43,761)	(43,761)	(43,761)	(43,761)	(43,761)	(525,126)	
Taxation	12,253	12,253	12,253	12,253	12,253	12,253	12,253	12,253	12,253	12,253	12,253	12,253	147,035	
Net Profit After Tax	(31,508)	(31,508)	(31,508)	(31,508)	(31,508)	(31,508)	(31,508)	(31,508)	(31,508)	(31,508)	(31,508)	(31,508)	(378,091)	
Net Profit %	-183%	-183%	-183%	-183%	-183%	-183%	-183%	-183%	-183%	-183%	-183%	-183%	-183%	

Table 4.10: Notes to explain assumptions made for calculations of financial prefeasibility.

Note 1	150 kW at 75% capacity for 24 hours gives 2700kWh per day (59400 kWh per month using 22 working days).
Note 2	Schenk enterprise produces 10 tons of woodchips per day, which they burn as waste. The gasifier requires 225 kg wood per hour, which translates to 5.4 tons of wood waste per day (24 hours).
Note 3	4 operators who will rotate shifts at a salary of R4000, 00 per person per month.
Note 4	No lease fees, land is provided by Schenk enterprise free of charge. The land belongs to the community.
Note 5	Carbon Credits sold at 12c per kW.
Note 6	The CAPEX and contingency funds are provided by Eskom.

Table 4.11: Annual cash flow statement for 7 years.

	Mar-10	Mar-11	Mar-12	Mar-13	Mar-14	Mar-15	Mar-16
Sales Revenue	206,712	237,719	273,377	314,383	361,541	415,772	478,137
Fuel Costs	-	-	-	-	-	-	-
Operators	(192,000)	(215,040)	(240,845)	(269,746)	(302,116)	(338,370)	(378,974)
Rent	-	-	-	-	-	-	-
Cost of Sales	(192,000)	(215,040)	(240,845)	(269,746)	(302,116)	(338,370)	(378,974)
Gross Profit	14,712	22,679	32,532	44,637	59,425	77,402	99,163
Carbon Credits Income	162	162	162	162	162	162	162
Project Management	(120,000)	(138,000)	(158,700)	(182,505)	(209,881)	(241,363)	(277,567)
Audit & Accounting fees	(60,000)	(67,200)	(75,264)	(84,296)	(94,411)	(105,741)	(118,429)
Maintenance & technical support	(60,000)	(65,400)	(71,286)	(77,702)	(84,695)	(92,317)	(100,626)
Admin & Other	(60,000)	(66,000)	(72,600)	(79,860)	(87,846)	(96,631)	(106,294)
Operating Costs	(299,838)	(336,438)	(377,688)	(424,200)	(476,671)	(535,889)	(602,754)
Operating Cash	(285,126)	(313,759)	(345,156)	(379,563)	(417,246)	(458,487)	(503,591)
Taxation Paid	147,035	154,381	162,312	170,858	180,046	189,901	200,440
Net Cash Generated Operating	(138,091)	(159,379)	(182,845)	(208,706)	(237,200)	(268,587)	(303,151)
Eskom Financing	5,000,000						
Capital Investment	(4,100,000)						
Net Cash Movement	761,909	(159,379)	(182,845)	(208,706)	(237,200)	(268,587)	(303,151)
Bank Balance	761,909	602,531	419,686	210,980	(26,219)	(294,806)	(597,957)

Table 4.12: General expenditure assumptions made for the financial prefeasibility.

Equipment	Cost	Useful life	Depreciation value
450Nm3/h reactor (Carbo Consult)	2,600,000	20	130,000
Gas engine & Genset (Carbo Consult)	1,000,000	10	100,000
Peripherals / Physical Structure	500,000	50	10,000
Total for equipment	4,100,000		240,000
Finance to cover working capital requirements / contingencies	900,000		
Financing from Eskom	5,000,000		

Table 4.13: General assumptions made for the financial prefeasibility.

1. Logistics & project management costs for project manager
2. Audit & Accounting Fees at R60, 000. 00
3. Environmental Compliance at R0 because EIA is available for the site
4. Maintenance & technical support from Carbo Consult at R20, 000.00
5. Interest on funds from Eskom is zero.
SALES / CAPACITY CONSTRAINTS
1. Tariffs annual inflation rate of 15%
2. Operation at 75% capacity or 24 hours per day
3. Electricity price at R0.29c/kWh. The rate was estimated to increases at 15% over the following 7 years.
4. Carbon credits at R0.12c/kW.
5. Free Fuel from Schenk enterprise in return for low cost electricity.
6. Daily fuel consumption of 5.4 tons (225kg of wood waste per hour).
7. Free land provided by Schenk enterprise.

4.7. GASIFIER INSTALLATION

After the completion of various studies mentioned in the latter sections, the System Johansson Biomass Gasifier (SJBG) was recommended as a possible solution to the needs of the community given the significant production of biomass waste by the sawmill (about 10 tonnes per day). An amount of about R5 million was made available by Eskom to finance the gasification project. An agreement was reached with the sawmill owner for provision of free biomass waste and land, the sawmill operator currently leases land from the community and he was willing to give a portion of the land back to the community for the purpose of the project. A community trust was established to oversee the implementation of the project and its associated business ventures. Figure 4.11 shows the structure of the gasifier that was manufactured and installed at the village.

Figure 4.11: Gasifier installation at Melani village with some associated components. The gas engine used is shown in figure 2.5.

4.8. ENVISAGED PROJECT IMPACT ON COMMUNITY

A more important indicator of project feasibility is the actual impact on the community itself. Directly, the bakery project will create at least twelve full time jobs and two part time jobs. The success of the bakery project in turn will create positive expansion either within the project or through diversification. This again will lead to more jobs being created. The gasifier project would create four full time jobs and six part-time jobs for operators.

Initially, three proposed business ventures were recommended, namely a broiler production, bakery and maize mill. Presently, only the latter two have been recommended with the bakery being the first to be undertaken. The reason for halting the broiler production is that in order to slaughter chickens, a registered abattoir is required. The closest abattoir is located at Phandulwazi village, which is about 10km away from Melani village, and this abattoir is not equipped to handle poultry slaughter. The broiler production will be considered at a later stage and a registered abattoir will also be established at Melani village.

Both the maize mill and the bakery are projects identified by the community through a questionnaire developed by the University of Fort Hare, Institute of Technology as part of this research. The Grain Mill was recommended because most of the local community members grow a small amount of maize (subsistence farming). This is then used throughout the year after processing to produce samp and Millie meal. However, in order to mill the maize they have to travel about five kilometers using pickups and/or ox-cats, this makes it not viable due to the high cost of transport and milling. Those who grow more than needed for household consumption can add value to their excess maize by processing it a packaging it for sale locally. The bakery was recommended for initiating the business ventures and the bakery would be implemented at a later stage.

The bakery was recommended primarily as a result of the basic food eaten in such rural communities, namely bread, samp and porridge. A bakery will also be able to supply the other surrounding rural communities who all sourced their bread from Alice Town (about 13km from Melani Village). By adding value on site, additional jobs can be created; most of these jobs would be occupied by women leading to women economic empowerment in the area. Money normally spent on services rendered from outside the area can now be retained locally for further distribution.

The details of the bakery are presented in table 4.15. The bakery container installation started on March 7, 2010. The container is supplied by BakersMate.

Table 4.15: The details of the bakery under installation at Melani village.

Details	**Quantity/No.**
Capacity	500-1500 loaves per 8 hours
Staff requirements	5 people per 8 hours
Energy requirements	25kW
Gasifier size required	50kW
Feedstock requirements	67kg/hr

The operation of the bakery requires 5 staff per 8 hours shift producing between 500-1500 loaves of bread. The electrical demand of the equipment in the container is 25kW, which requires a 50kW gasifier operating at 75% capacity. The 50kW gasifier would require approximately 67kg/h of fuel with 15% moisture content. The gasifier installed at Melani village is three times the capacity of the gasifier needed for this bakery to operate; and the fuel produced by the saw mill is also more than the fuel required to sustain the bakery. The additional electricity produced will e sold to the saw mill operators so that the gasifier installed can be operated at 25% or more capacity, which is its turn down ratio.

Figure 4.12 shows the photo of the container bakery currently under installation at Melani village.

Figure 4.12. The container bakery currently being installed at Melani village [Photo: BakersMate, 2010].

Indirectly, the economic impact of the projects would be that essential services will be rendered locally. This will be more cost effective and all inhabitants will benefit from this. Furthermore, the money spent will be retained within the community and will be distributed through other means within the community. This is probably the single most important factor. Community money is not lost to big business elsewhere. What is not paying salaries within the community will be used for future value adding within the community.

Socially, it is very important that the projects succeed. This will give both the community at large as well as the Trustees confidence in attempting new projects. A sense of pride and direction will be established that is a key to the success of sustainable project and sustainable empowerment projects.

The researcher is currently managing the establishment of the bakery that will employ ten previously unemployed people for bread baking and two previously unemployed people will be employed as security guards.

The bakery project is coming with skills development, the ten people who will work in the bakery will be attending a SETA accredited course on bread and cake baking. The course will be facilitated by Anchor Yeast in May 2010. The funding for the course has been provided by Eskom development Foundation, who also funded the establishment of the bakery and the initial materials needed for bread baking. The researcher is currently managing all these developments under the auspices of the University of Fort Hare.

CHAPTER 5

SUMMARY CONCLUSIONS AND RECOMMENDATIONS

5.1. SUMMARY OF FINDINGS

The application of renewable energy technologies has gained interest over the years as an alternative to conventional fossil fuels technologies that are associated with a number of environmental impacts. Biomass gasification technologies are among the renewable energy technologies that attracted high interest around the world. These technologies are used mainly for electricity generation and production of liquid fuels. Fixed bed downdraft gasifiers are preferred for electricity generation using gas engines or gas turbines; this is because they produce gas with very little if any quantities of tar. The tar increases the maintenance costs of engines and gas turbines as it interferes negatively with their operation. However the major drawback with downdraft gasifiers is their comparatively low conversion efficiency because they do not have high rate of charcoal burnout, and they are applicable only at small scale (up to 30MW).

The development of the cyclone with an internal electric field improved the particle collection efficiency of the conventional cyclone dust collector. This implies that the sawdust filters downstream could be removed leading to lower cost of manufacturing the plant for future projects. This will results in reducing the period for the return on investment. The gas and temperature measuring system developed is useful in performance monitoring of the gasifier system. This will allow the detection of technical problems on the system.

This research looked at the production and impact of fuel compartment condensates on gasifier efficiency. This was done because condensates were reported to be one of the operational problems of the system, but there was no information about their impact on

system efficiency. The research established that condensates do not have a direct impact on gasification efficiency. This was found to be contrary to the widely published theory that high fuel moisture content reduces the conversion efficiency of biomass gasifiers since most of the energy is lost during drying of fuel and it is therefore no longer available for reduction reactions. It was established that the energy lost during drying of fuel in the carbonization zone is retained in the gasifier during drying of fuel in the fuel hopper. By the time the wet fuel reaches the combustion/bed zone it is already dry thereby keeping the temperature at the maximum achieved by the gasifier.

This research also established an interesting phenomenon; the water driven off during drying of fuel in the carbonization zone gets condensed on fuel in the fuel hopper thereby increasing the fuel moisture content of the fuel in the hopper. This happens mainly during gasifier shut down. The impact of this on gasifier efficiency was not clear.

It was also established that the rural community of Melani village is characterized by the lack of skills amongst community members and high unemployment rate. The community needed projects that could empower people economically.

5.2. SUMMARY OF CONTRIBUTIONS

The developed Gas and Temperature Measuring System (GTMS) can be of interest to researchers who are looking for a low cost data acquisition system for measuring gas and temperatures at biomass gasifiers. Some researchers use to employ Non-Dispersive Infrared gas sensors for measurement of single gas species such as carbon dioxide in isolation. The GTMS offers a much more comprehensive approach to the measurement of the gas and temperatures. A paper on the GTPS designed was accepted for publication in the journal of Engineering Design and Technology Information with reviewers unanimously agreeing that the paper will contribute knowledge to the field as it contains new and significant information.

The developed cyclone with internal electric field is a novel idea that could be employed in biomass gasification and results in low cost gasifier systems. The use of external electric field in cyclones is not new even though there is still ongoing research in the field, however the application of an internal electric field, which result in much higher particle collection efficiencies for particles less than 5 microns in size is an entirely new approach. This idea was also accepted for publication in the journal of Engineering Design and Technology Information, also with reviewers agreeing that the paper new and significant information.

An analysis of the impact of fuel compartment condensates on biomass gasifier conversion efficiency was thoroughly undertaken. There is currently no information about the production and impact of fuel compartment on gasifier conversion efficiency. This research provided information on this aspect and raised questions regarding the impact of fuel moisture content on biomass gasifier efficiencies. This is because the production of condensates is primarily dependent on fuel moisture content. A paper has since been submitted to the Biomass and Bioenergy journal for publication since it was established that the information provided by this research could be of interest to experts in the field at international level.

A model for technology transfer developed by this research was also seen as an enormous contribution because its application could results in renewable energy technologies applied particularly in developing countries to improve the socio-economic status of the rural poor. A paper on the implementation of the Melani biomass gasification project was also accepted and published in Renewable Energy journal because of the significance of the information provided by this research.

5.3. CONCLUSIONS

Biomass constitutes the largest part of the fuel used to meet the energy needs of the rural communities irrespective of the rural electrification programme initiated by the South African government. The abundant biomass materials available in most rural areas of South Africa as results of saw mill operation can be successfully utilized to provide clean energy to either meet the energy needs of the rural communities or generate low cost electricity that could be used to support community small businesses. The Melani biomass gasification project can be used to provide the basis for establishment of such projects. The cost of the System Johansson Biomass gasifier can be substantially reduced through the use of the cyclone with internal electric field, which negates the necessity of the sawdust filters downstream.

5.4. RECOMMENDATIONS FOR FUTURE RESEARCH

This research successfully developed a low cost data acquisition system that can be deployed and used to measure the performance of biomass gasifier systems. The research also developed a cyclone dust collector with enhanced particle collection efficiency. The impact of condensates on gasifier efficiency was also well established. It was also established that some water driven off during the drying and/or carbonization of fuel condenses on the surface of the fuel in the hopper; however the impact of this on gasifier conversion efficiency was not established by this research. A business model was developed through financial forecasts to justify the establishment of the biomass gasification project and its associated community based projects.

However there are a number of issues that could not be addressed by this research; these include the investigation of the impact of the perceived corona effect in the cyclone generated when the solenoid was supplied with 3kV DC, when the cyclone was connected to the gasifier. This is a phenomenon that needs further research.

This research also raised some questions surrounding the impact of fuel moisture content on gasifier conversion efficiency; this needs to b further investigated. The impact of condensation of moisture on the fuel in the hopper on gasifier conversion efficiency also needs to be investigated.

There is a need to conduct an investigation into the possibility of the use of the developed cyclone with internal electric field in the projects that will follow the Melani village gasification project. This could get rid of the two sawdust filters used for gas purification downstream, however there is need to establish whether the gas would pass with some water from the gas scrubber that could interfere negatively with the operation of the internal combustion engine.

There is also a need for an in-depth analysis of the socio-economic impact of the biomass gasification project on the Melani village community. This research only indicated the envisaged impact of the project on the socio-economic status of the community.

REFERENCES

Altafini C. R. Paulo R. Wander and Ronaldo Barreto, M. Prediction of the working parameters of a wood waste gasifier through an equilibrium model, Energy Conversion and Management **44** (17), (2003), pp. 2763-2777.

Altafini C. R. A chemical equilibrium model of the coal gasification process based on the minimization of the Gibbs free energy. Florence World Energy Research Symposium, FLOWERS'97, Florence, Italy, 1997, pp. 419–27.

Barrio, M. Fossum, M. Hustad J. E. (2007) A small-scale stratified downdraft gasifier coupled to a gas engine for combined heat and power production. Norwegian University of Science and Technology, Department of Thermal Energy and Hydro Power, 7491 Trondheim, Norway Sintef Energy Research, Department of Thermal Energy, 7465 Trondheim, Norway.
http://www.tev.ntnu.no/MariaBarrio/publikasjoner/article%20gasifier.pdf, Last accessed February 2007.

Beeneckers A. A. C. M. Biomass gasification in moving beds, a review of European technologies, Renewable energy **16** (1999), pp. 1180-1186.

Biomass Technology Group, http://www.btgworld.nl/uploads/documents/Tar%20definitions.pdf, Last accessed May 2008.

Brammer J. G. and Bridgwater A. V. The influence of feedstock drying on the performance and economics of a biomass gasifier engine CHP system, Biomass and Bioenergy **22** (2002) (4), pp. 271-281.

Burth, M. Verghese G. C. and Velez-Reyes, M. Subset selection for improved parameter estimation in on-line identification of a synchronous generator, *IEEE Trans. Power Syst.* **14** (1) (1999), pp. 218–225.

Carbo Consult, 2008, http://www.carboconsult.com/fuel-compartment.asp, Last accessed October 2008.

Costello, R. (1999) An overview of the US Department of energy's biomass power program. In Sipila K. and Korhonen M. Power production from biomass 111, gasification and pyrolysis R&D for industry, VTT symposium 192, VTT Espoo.

Cooper, C. D. and Alley, F. C. (1986) Air Pollution Control: A Design Approach. Prospect Heights, Ill.: Waveland Press.

Chen, J. S. Kinetic engineering modelling of co-current moving bed gasification reactors for carbonaceous material. Ph.D. thesis, Cornell University, New York, 1987.

Cheng, Y. Li, Y, Lisi, D. and Wang, W. M. Preparation and characterization of Pd/Ni thin films for hydrogen sensing, Sensors and Actuators B **30** (1996), pp. 11-16.

Cheng, C. and Azevedo, J. L. T. Estimating the higher heating value of biomass fuels from basic analysis data, Biomass and Bioenergy **28** (2005) (5), pp. 499-507.

De Castro, A. J. Lerma, A. M. Lopez, F. Guijarro, M. Diez, C. Hernando, C. and Madrigal, J. Open-path Fourier Transform Infrared spectrometry characterization of low temperature combustion gases in biomass fuels, Infrared Physics and Technology **51** (1) (2007), pp 21-30.

Dean J.R. 2003, Methods for Environmental trace analysis, John Wiley & Sons, England, page 96.

Department of Minerals and Energy: DME. (2004) White paper on the energy policy of the republic of South Africa. Department of minerals and energy, Private bag x 59, Pretoria, 0001.

Dietz, P. W. Electrostatically enhanced cyclone separators. Powder Technology, **31** (2) (1982), pp 221-226.

European Commission, (1997) Communication from the commission: Energy for the future: Renewable energy sources-White paper for a community strategy an action plan. COM (97) 599, final of 26.11.97, Brussels. In, Maniatis K. 2005 Progress in biomass gasification: overview. Directorate General for energy and transport, European commission, Rue de Loi 200, 1049 Brussels Belgium.
http//europa.eu.int/comm./energy/res/sectors/doc/bioenergy/km_tyrol_tony.pdf. Last accessed July 2006.

Enger, E.D. and Smith, B.F. (2002) Environmental Science: A study of interrelationships. McGraw-Hill, New York.

Eriksson, M. and Ekedahl, L. G. The influence of CO on the response of hydrogen sensitive Pd-MOS devices, Sensors and Actuators B, **42** (1997), pp. 217–223.

Faaij, A, van Ree, R. Waldheim, L. Olsson E. Oudhuis A. F. van Wijk, AD. Daey-ouwensll, C. and Turkenburg, W. Biomass and Bioenergy **12** (6) (1997), pp. 387-417.

Faughn, J. S. Serway, R. A. Vuille, C. and Bennett, C. A. (2006), Serway's college physics, Thomson Brooks/Cole, Belmont, United States of America.

Fard, R. D. Karrari, M. and Malik, O. P. Synchronous generator model identification for control application using Volterra series, *IEEE Trans. Energy Convers.* **20** (4) (2005), pp. 852–858

Food and Agricultural Organization. (1986) Wood gas as engine fuels. FAO forestry papers.
http://www.fao.org/documents/show_cdr.asp?url_file=DOCREP/TO512eOb.htm. Last accessed May 2006.

Food and Agricultural Organization, FAO Forestry paper-72. (1986) Wood gas engine fuel,
http://www.fao.org/documents/show_cdr.asp?url_file=/docrep/t0512e/T0512e09.htm,
last visited, 29/05/2006.

Fermeglia, M. De Simon, G. Donald G. Energy production from biomass gasification by molten carbon fuel cells process simulation, proceedings of the International conference on Hydrogen Age, Palermo, Italy, 18-20 October 2005.

Fogelberg, J. Eriksson, M. Dannetun, H.M. and Petersson, L. G. Kinetic modeling of hydrogen adsorption/absorption in thin films on hydrogen-sensitive field-effect devices: observation of large hydrogen-induced dipoles at the Pd–SiO2 interface, Journal of Applied Physics. **78** (1995), pp. 988–996.

Gasification fuels, (2005)
http://www.fao.org/documents/show_cdr.asp?url_file=/DOCREP/TO512E/TO512eob.htm, Last accessed March 2005.

Gradon, L. Luckner, H. Podgorski, A. Wertejuk, Z. Separation of neutral and charged aerosol particles in cyclones with external electric field, Journal of Aerosol Science **29** (1998), pp S927-S928.

Holley, S. Baune, M. and Blood, C. (2006) Cyclone separators. http://www.wsu.edu:8080/~gmhyde/433_web_pages/cyclones/CycloneRptTeam2.htm
Last accessed March 2007.

Hos, J.J. and Groeneveld, M.J. (1987) Biomass gasification, Biomass: Renewable energy, eds Hall D.O and Overend R.P. John Wiley & sons.

H2Scan, (2007) http://www.h2scan.com/, Last accessed May 2007.

Higo, M. and Dowaki, K. A Life Cycle Analysis on a Bio-DME production system considering the species of biomass feedstock in Japan and Papua New Guinea, Applied Energy **87** (1) (2010) 58-67.

Hughes, R. C. and Schubert, W. K. (1994) Extended range chemical sensing apparatus, US Patent 52796, USA.

International Energy Agency (2000) World energy outlook 2000, IEA, Paris. http//europa.eu.int/comm./energy/res/sectors/doc/bioenergy/km_tyrol_tony.pdf. Last accessed February 2008.

IEEE Std 1110-2002, IEEE Guide for Synchronous Generator Modeling Practices and Applications in Power System Stability Analysis, 2003, pp. 1–72.

Jayah T. H. Evaluation of a downdraft wood gasifier for tea manufacturing in Sri Lanka. M.Eng. Sc. thesis, Department of Civil and Environmental Engineering, University of Melbourne, 2002.

Jayah, T. H. Lu, A. Fuller, R. J and Stewart, D. F. Computer simulation of a downdraft wood gasifier for tea drying, Biomass and Bioenergy **25** (4) (2003) 459-469.

Jayah T.H, Lu Aye, Fuller RJ, Stewart D. F. Wood gasifiers for tea drying in Sri Lanka. Proceedings of the 37th Annual Conference of the Australia and New Zealand Solar Energy Society, Geelong, Australia, 1–3 December 1999. p. 1–10.

Jenkins, B. M. Baxter, L.L. Miles Jn, T. R. and Miles, T. R. Combustion properties of biomass. Fuel Processing Technology **54** (1998) (1-3), pp. 17-46.

Johansson, K. G. (2002) System Johansson gas producers: Brief description of wood gas producer system for tar free continuous gas generation. Midrand, South Africa. Unpublished document.

Johansson, K. G. (2002) (b) System Johansson gas producers: General description and operator's instructions. Midrand, South Africa. Unpublished manual.

Johansson, K.G. (2004) System Johansson gas producers: General description and operator's instructions for wood gas producers, unpublished manual.

Karrari, M. and Menhaj, M. B. Application of different neural networks for identification of power systems, *UKACC Conference on Control 2000* University of Cambridge, UK (2000).

Karrari, M. and Malik, O.P. Identification of physical parameters of a synchronous generator from on-line measurements, *IEEE Trans. Energy Convers.* **19** (2) (2004), pp. 407–415.

Karrari, M. and Malik, O. P. Identification of Heffron–Philips model parameters for synchronous generators using online measurements, *IEE Proc. Gener. Transm. Distrib.* **151** (3) (2004), pp. 313–320.

Karayaka, H. B. Keyhani, A. Heydt, G. T Agraval B. L. and Selin, D. A. Synchronous generator model identification and parameter estimation from operating data, *IEEE Trans. Energy Convers.* **18** (1) (2003), pp. 121–126

Kelemen Á, Imecs M: (1993) Vector Control of AC Drives, Vol. 2: Vector Control of Synchronous Machine Drives, Ecriture Publisher, Budapest.

Kelemen, Á. Imecs M. Vector control system for frequency and voltage of synchronous generators, Proceedings of International Conference on Electrical Machines, ICEM '90, (1990), Cambridge, Massachusetts, USA.

Kelemen, Á. Imecs M. Procedure and Driving Device for Unitary Automatic Vector Control of the Active and Reactive Power of Synchronous Generators by Means of Frequency and Voltage Regulation (in Romanian), Patent of Invention Nr. 104278/30.10.1989, Romania.

Kerekezi, S. and Ranja, T. (1997) Renewable energy technologies in Africa, Zed Books ltd. London, UK.

Kinkade, B. R. Daly J. T. Johnson, E. A (2005) MEMS-Enabled Intrinsically Safe Infrared Combustible Gas Sensors, Ion Optics, Inc. 411 Waverly Oaks Road, Waltham, MA 02454, http://www.ion-optics.com/downloads/sensorsExpo%206_03.pdf

Kobayashi, H. Yoshikawa. K. Shioda, S. (1999) Coal/waste gasification power generation systems using high temperature air. Proceedings of the 2nd International Symposium on advanced Energy Technology, Hokkaido University, Sapporo, Japan, pp. 447-454.

K2W Environmental Equipment Co, (2004) Infrared gas analyzer and gas filter correlation, 335 North York Rd, Willow Grove, PA 19090, http://www.k2bw.com/5_c_18.htm, Last accessed March 2008.

Li, X. T. Grace, J. R. Lim, C. J. Watkinson, A. P. Chen, H. P. Kim, J. R., Biomass gasification in a circulating fluidized bed, Biomass and Bioenergy **26** (2) (2004), pp. 171-193.

López, F. and de Frutos, J. Multispectral interference filters and their application to the design of compact _non-dispersive infrared gas_ analyzers for pollution control, Sensors_ Actuators A **37** (1993), pp. 502–506.

Lu, C. Chen, Z. Saito, K. Hydrogen sensors based on Ni/SiO2/Si MOS capacitors Sensors and Actuators B: Chemical **122** (2) (2007), pp. 556-559.

Madhukar, R. Mahishi, Y. and Goswami, D. Thermodynamic optimization of biomass gasifier for hydrogen production, International Journal of Hydrogen Energy **32** (16) (2007), pp. 3831-3840.

Maniatis K. (1999) Overview of EU THERMIE gasification projects. In Sipila K. and Korhonen M. Power production from biomass 111, gasification and pyrolysis R&D for industry, VTT symposium 192, VTT Espoo.

Mathieu, P. Dubuisson, R. Performance analysis of a biomass gasifier. Energy Conversion and Management **43** (2002), pp. 1291–1299.

Mamphweli, N. S. Meyer E. L. and Makaka, G. Efficiency investigation and producer gas analysis at the System Johansson Biomass Gasifier™, Proceedings of the 15th European Biomass Conference and Exhibition, Berlin, 03-07 May 2007, pp 855-859.

Mckendry, P. Energy production from biomass (part3): gasification technologies, Bioresource Technology **83** (2002) (1), pp. 55-63.

Miles, T. (1999) Biomass gasification in South Africa.
http//listserv.repp.org/pipermail/gasification/1999-september/003667.htm. Last accessed March 2008.

Miles, P. E. Miles, J. R. Baxter, L. L. Bryers, R. W. Jenkins, B.M. and Oden, L. L. (2006) Alkali deposits, http://www.trmiles.com/alkali/alkali_Report.pdf, Last accessed April 2006.

Milligan JB. Downdraft gasification of biomass. Ph.D. thesis, Aston University, Birmingham, UK, 1994.

Mulrooney, J. Clifford, J. Fitzpatrick, C. and Lewis, E. Detection of carbon dioxide emissions from a diesel engine using a mid-infrared optical fibre based sensor, Sensors and Actuators A **136** (2007), pp 104-110.

Melgoza, J. J. R. Heydt, G. T. Keyhani, A. Agrawal B. L. and Selin, D. Synchronous machine parameter estimation using Hartley series, *IEEE Trans. Energy Convers.* **16** (1) (2001), pp. 49–54

Munasinghe P. C and Khanal S. K Biomass-derived syngas fermentation into biofuels: Opportunities and challenges, Bioresource Technology, doi:10.1016/j.biortech.2009.12.098 2009. Last accessed on March 2010.

Mckendry, P. Energy production from biomass (part3): gasification technologies, Bioresource Technology **83** (2002) (1), pp. 55-63.

Nebiker, P. W. and Pleisch, R. E. Photoacoustic gas detection for fire warning, *Fire Saf Jnl*, **37** (4) (2002), pp. 429–436.

Oregon Department of Energy (2004) Biomass energy technology. http://www.oregon.gov/ENERGY/RENEW/Biomass/bioenergy.shtml, Last accessed December 2006.

Plucinski, J. Gradon, L. Nowicki, J. Collection of aerosol particles in a cyclone with an external electric field, Journal of Aerosol Science **20** (6) (1989), pp 695-700.

Quaak, P. Knoef, H. and Stassen, H (1999) Energy from Biomass: A review of Combustion and Gasification Technologies, The World Bank, Washington DC, USA.

Rajvanshi A. K. (1986) Biomass Gasification., Published as chapter 4 in book: Goswami D.Y., Ed (1986), Alternative Energy in Agriculture Vol. II., CRC Press, pp 83-102. http://nariphaltan.virtualave.net/gasbook.pdf, last visited 11/11/ 2008.

RaviPrakash, J. McDaniel, A. H. and Horn, M. Pilione, L. Sunal, P. Messier, R. McGrath, R.T. and Schweighardt, F.K. Hydrogen sensors: Role of palladium thin film morphology", Sensors and Actuators B: Chemical, **120** (2) (2007), pp. 439-446.

Reed, T. B. and Das, A., (1988) Handbook of Biomass Downdraft Gasifier Engine Systems, SERI/SP-271-3022, UC Category: 245, Solar Energy Research Institute, 1617 Cole Boulevard, Golden, Colorado 80401-3393.

Shamsollahi P. and Malik, O. P. On-line identification of synchronous generator using neural networks, *Proceedings of the 1996 Canadian Conference on Electrical and Computer Engineering, CCECE'96* (1996), pp. 595–598.

Stefopoulos, G. K. Georgilakis, P. S. Hatziargyriou N. D. and Sakis A. P. Meliopoulos, A genetic algorithm solution to the governor-turbine dynamic model identification in multi-machine power systems, *IEEE Conference on Control Application* Toronto, Canada (2005), pp. 245–250.

Stassen, H. E. (1995) Small-Scale Biomass Gasifiers for Heat and Power: A Global Review, World Bank Technical Paper No. 296, Energy series, World Bank, Washington DC, USA.

Sharma, A. K., Equilibrium and kinetic modeling of char reduction reactions in a downdraft biomass gasifier: A comparison, Solar Energy **82** (2008), pp 918–928.

Sharma, A. Kr. Equilibrium modeling of global reduction reactions for a downdraft (biomass) gasifier. Energy Conversion and Management **49** (4) (2008), pp. 832-842.

Schapfer, P., and Tobler, J., Theoretical and Practical Investigations Upon the Driving of Motor Vehicles with Wood Gas, Bern 1937.

Tan, Q. Wen-dong Zhang, W, Xue, C. Xion, J. Ma, Y. and Wen, F. (2008), Design of mini multi gas monitoring system based on IR absorption Optics & Laser Technology **40** (5), pp. 703-710.

TAPPI test methods, T264 om-88 and T222 om-88, TAPPI Press, USA, 1992

Tripod, Biomass Gasification: Technology and utilization, http://members.tripod.com/cturare/his.htm, last visited, 29/05/2006.

Urone, P. P. (1998) College Physics, Brooks/Cole Publishing, USA.

van de Beld Ir. L, (2004) Flash pyrolysis. Biomass Technology Group. http://www.btgworld.com/technologies/pyrolysis.html, Last accessed on December 2006.

van den Enden, P. J. Silva Lora, E. B. Design approach for a biomass fed fluidized bed gasifier using the simulation software CSFB. Biomass and Bioenergy **26** (2004), pp. 281 – 287.

Venayagamoorthy, G. K. and Harley, R. G. Decentralized online neuro-identification of turbogenerators in a multi-machine power system, *IEEE Power Engineering Society Summer Meeting, vol. 1* Boston, MA, USA (2000), pp. 217–222.

Watkins, S. P, Pinnington, T. Hu, J. Yeo, P. Kluth, M. Mason, N. J. Infrared_ single wavelength gas composition monitoring for metal organic vapour-phase epitaxy, Journal of Cryst Growth, **221** (1–4) (2000), pp. 166–71.

Werther, J. Saenger, M. Hartge, E.U. Ogada, T. and Siagi, Z. Combustion of agricultural residues, Progress in Energy and Combustion Science **26** (2000) (1), pp. 1-27.

Williams, R. H. and Larson E. D. Biomass gasifier gas turbine power generating technology., Biomass and Bioenergy **10** (2-3) (1996), pp. 149-166.

World Energy Council, 2004. Survey of energy resources, Elsevier publishers. http://www.worldenergy.org/documents/ser2004.pdf, Last accessed March 2010.

Wright, S. H. Determination of synchronous machine constants by test, *AIEE Trans.* **50** (1931), pp. 1331–1351.

Zubtsov, V.M., Pian, C.C.P., and Yoshikawa, K. Potential applications of high-temperature air/steam blown gasification and pyrolysis systems. Energy **30** (2005), pp. 2229-2242.

APPENDIX A: RESEARCH OUTPUTS

Research outputs associated with this work include one paper published in Renewable Energy Journal, One paper published in the International Journal for Energy and Environment and two papers accepted for publication in the Journal of Engineering Design and Technology Information, as well as one paper submitted for publication in the Biomass and Bioenergy Journal. Three papers were also published in International conference proceedings. Four papers were presented at International conferences, and six papers were presented at national conferences. The list of these outputs is as follows:

A1: PUBLICATIONS

N. S. Mamphweli and E. L. Meyer, Implementation of the biomass gasification project for community empowerment at Melani village, Eastern Cape, South Africa, Renewable Energy **34** (2009), pp 2923–2927.

N. S. Mamphweli and E. L. Meyer, Efficiency investigation of the Eskom 180Nm^3/h gasifier system, International Journal for Energy and Environment **1** (1) (2010), pp 113-120.

N. S. Mamphweli and E. L. Meyer, Development and testing of a low-cost gas analyzer deployed at a biomass gasifier, Proceedings of the World Renewable Energy Congress (Florence, Italy 19-25 August 2006). Elsevier Ltd, London.

N. S. Mamphweli, E. L. Meyer and G. Makaka, Efficiency investigation and producer gas analysis at the System Johansson Biomass Gasifier™, Proceedings of the 15th European Biomass Conference and Exhibition, Berlin, 03-07 May 2007, pp 855-859.

N. S. Mamphweli, E. L. Meyer and G. Makaka, Piloting biomass gasification in South Africa Using the System Johansson Biomass gasifier, Proceedings of the 15th European Biomass Conference and Exhibition, Berlin, 03-07 May 2007, pp 930-934.

A2: ACCEPTED FOR PUBLICATION

N. S. Mamphweli and E. L. Meyer, Development of a cyclone with internal electric field, Journal of Engineering, Design and Technology **8** (2), 2009.

N. S. Mamphweli and E. L. Meyer, Performance monitoring system for a biomass gasifier, Journal of Engineering, Design and Technology, 2009.

A3: SUBMITTED FOR PUBLICATION

N. S. Mamphweli and E. L. Meyer, Quantification and impact of the chemical energy in fuel compartment condensates on biomass gasifier efficiency, Biomass and Bioenergy, 2009.

A4: CONFERENCE PAPERS

A4.1. International conferences

N. S. Mamphweli, E. L. Meyer and G. Makaka, Piloting biomass gasification project in South Africa, Conference on: Innovation methods on Renewable Energy, Bindura University, Zimbabwe, (2005).

See papers published in conference proceedings

A4.2. National conferences

N. S. Mamphweli and E. L. Meyer, Quantification and impact of the chemical energy in fuel compartment condensates on gasifier efficiency" 54th SAIP Conf., University of Kwazulu Natal., Durban (2009).

N. S. Mamphweli and E. L. Meyer, Integration of magnetic and electric field in cyclone dust collector 53rd SAIP Conf., University of Limpopo., Polokwane (2008).

N. S. Mamphweli and E. L. Meyer, Factors influencing the efficiency of biomass gasifier systems, 52nd SAIP Conf., Wits University, Johannesburg (2007).

N. S. Mamphweli and E. L. Meyer, Analysis of producer gas at a biomass gasifier using a low-cost gas analyzer developed at Fort Hare Institute of Technology, 51st SAIP Conf., University of Western Cape. Cape Town (2006).

N. S. Mamphweli and E. L. Meyer, Influence of condensates on the thermal efficiency of the Johansson Biomass Gasifier System, 50th SAIP Conf., University of Pretoria, Pretoria (2005).

N. S. Mamphweli and E. L. Meyer, The properties and suitability of off-cuts generated from sawmill operation as fuel for the System Johansson Biomass Gasifier, 4th South African Electric Power Research Conference, Johannesburg (2005).

APPENDIX B: MELANI VILLAGE COMMUNITY BACKGROUND SURVEY QUESTIONNAIRE

Age group, skills and employment status	**Female**	**Male**	**Total**	**Of total, how many disabled**
Under 10 years				
Between 10-20 years				
Between 20-50 years				
Between 50-70 years				
Over 70 years				
Sub-total				
Skills, specify skill type				
Employment, specify employer and employment type				
Total				